REV	REVISION DESCRIPTION	DATE	DRAWN	APPVD	DATE
01	INITIAL RELEASE PER DCN 0101236	10/18/02	J.Nygren		

NOTE:
THIS IS THE SCHEMATIC REPRESENTATION
FOR THE MICRO BLAZE VIDEO BOARD
XILINX PART NUMBER 0381112
BE AWARE THAT THE FOLLOWING DRAWING PAGES
ARE ALL PART OF THE SAME DRAWING. TITLES
ON INDIVIDUAL DRAWING TITLES VARY FOR ENGINEERING
AND CUSTOMER CLARITY. DRAWING FORMATS
ARE NOT THE TYPICAL XILINX FORMAT. THESE
ARE THE VIRTEX FORMAT FOR CONTINUITY
AND CUSTOMER RECOGNITION.

CONFIDENTIAL

This document is the property of Xilinx Incorporated and contains information which is confidential and proprietary to Xilinx. No part of this document may be copied, reproduced or disclosed to third parties without the prior written consent of Xilinx Incorporated.

XILINX®

TITLE: SCHEM, MICROBLAZE

DRAWN BY J.Nygren DATE 10/18/02

PROJECT: MICRO BLAZE

TOLERANCES

∠	X	XX	XXX
+/-.5°	+/-.1	+/-.01	+/-.005

Unless otherwise specified, dimensions are in inches.

CHECKED BY	DATE
ENG APPROVAL	DATE
MFG APPROVAL	DATE

FSCM 65994

SIZE	DRAWING NUMBER	REV.
A	0381112	01

SCALE NONE SHEET 0 OF 35

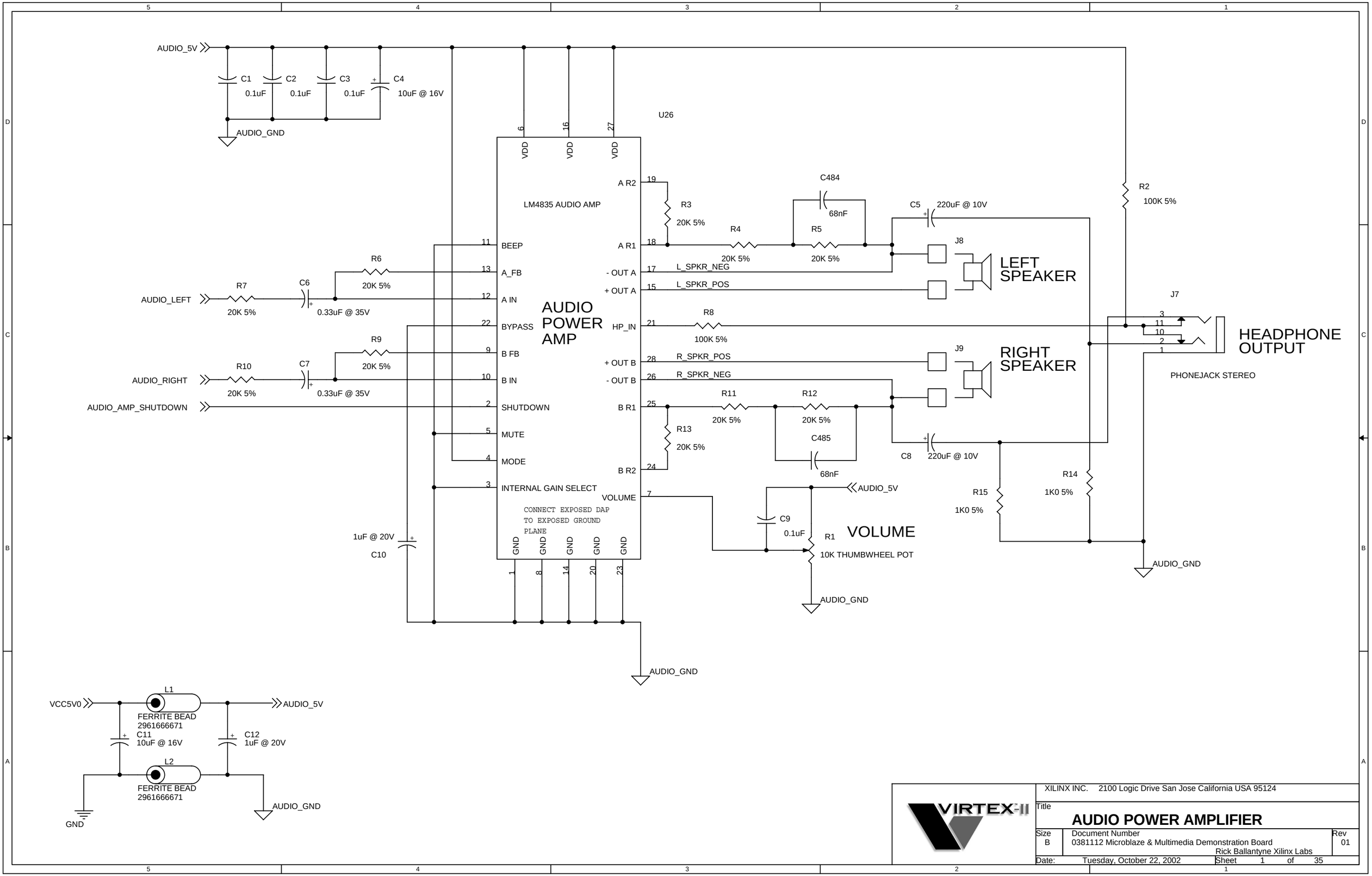
AUDIO_5V
C1 0.1uF
C2 0.1uF
C3 0.1uF
C4 10uF @ 16V
AUDIO_GND
U26
LM4835 AUDIO AMP
AUDIO POWER AMP
VDD 6
VDD 16
VDD 27
A R2 19
A R1 18
- OUT A 17
+ OUT A 15
HP_IN 21
+ OUT B 28
- OUT B 26
B R1 25
B R2 24
VOLUME 7
BEEP 11
A_FB 13
A IN 12
BYPASS 22
B FB 9
B IN 10
SHUTDOWN 2
MUTE 5
MODE 4
INTERNAL GAIN SELECT 3
CONNECT EXPOSED DAP TO EXPOSED GROUND PLANE
GND 1
GND 8
GND 14
GND 20
GND 23
R3 20K 5%
R4 20K 5%
R5 20K 5%
C484 68nF
C5 220uF @ 10V
J8
LEFT SPEAKER
L_SPKR_NEG
L_SPKR_POS
R8 100K 5%
R_SPKR_POS
R_SPKR_NEG
J9
RIGHT SPEAKER
R11 20K 5%
R12 20K 5%
R13 20K 5%
C485 68nF
C8 220uF @ 10V
R2 100K 5%
J7
HEADPHONE OUTPUT
PHONEJACK STEREO
R14 1K0 5%
R15 1K0 5%
AUDIO_5V
C9 0.1uF
R1 VOLUME
10K THUMBWHEEL POT
AUDIO_GND
AUDIO_LEFT
R7 20K 5%
C6 0.33uF @ 35V
R6 20K 5%
AUDIO_RIGHT
R10 20K 5%
C7 0.33uF @ 35V
R9 20K 5%
AUDIO_AMP_SHUTDOWN
1uF @ 20V
C10
VCC5V0
L1
FERRITE BEAD 2961666671
C11 10uF @ 16V
C12 1uF @ 20V
L2
FERRITE BEAD 2961666671
GND
VIRTEX-II
XILINX INC. 2100 Logic Drive San Jose California USA 95124
Title
AUDIO POWER AMPLIFIER
Size B
Document Number 0381112 Microblaze & Multimedia Demonstration Board
Rick Ballantyne Xilinx Labs
Rev 01
Date: Tuesday, October 22, 2002
Sheet 1 of 35

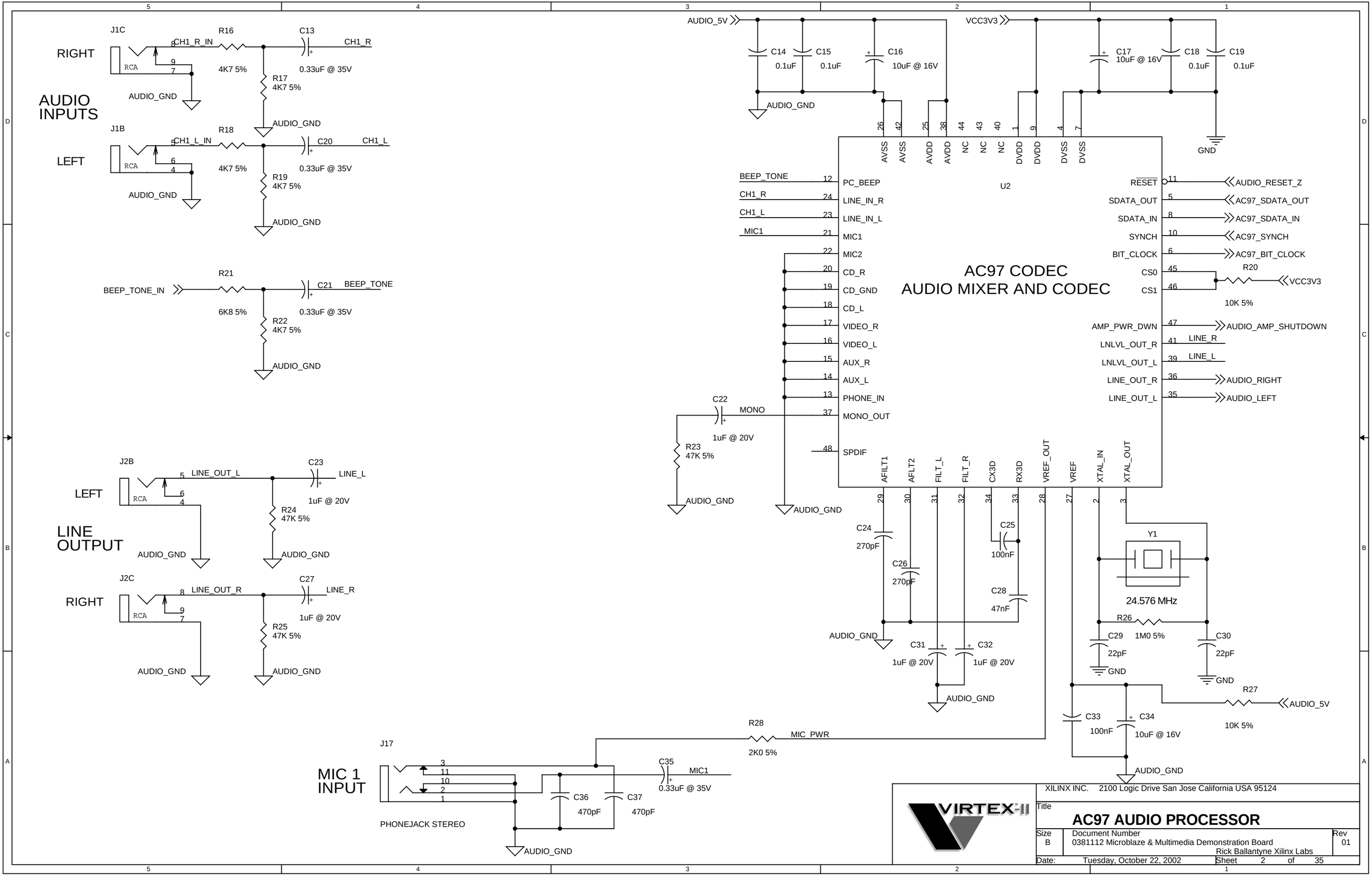
AUDIO INPUTS
RIGHT
LEFT
J1C
J1B
RCA
CH1_R_IN
CH1_L_IN
R16
R18
4K7 5%
C13
C20
CH1_R
CH1_L
0.33uF @ 35V
R17
R19
AUDIO_GND
BEEP_TONE_IN
R21
6K8 5%
C21
BEEP_TONE
R22
LINE OUTPUT
J2B
J2C
LINE_OUT_L
LINE_OUT_R
C23
C27
LINE_L
LINE_R
1uF @ 20V
R24
R25
47K 5%
MIC 1 INPUT
J17
PHONEJACK STEREO
C35
MIC1
0.33uF @ 35V
C36
C37
470pF
R28
MIC_PWR
2K0 5%
AUDIO_5V
VCC3V3
C14
C15
C16
C17
C18
C19
0.1uF
10uF @ 16V
GND
U2
AC97 CODEC
AUDIO MIXER AND CODEC
AVSS
AVDD
NC
DVDD
DVSS
PC_BEEP
LINE_IN_R
LINE_IN_L
MIC1
MIC2
CD_R
CD_GND
CD_L
VIDEO_R
VIDEO_L
AUX_R
AUX_L
PHONE_IN
MONO_OUT
SPDIF
RESET
SDATA_OUT
SDATA_IN
SYNCH
BIT_CLOCK
CS0
CS1
AMP_PWR_DWN
LNLVL_OUT_R
LNLVL_OUT_L
LINE_OUT_R
LINE_OUT_L
AUDIO_RESET_Z
AC97_SDATA_OUT
AC97_SDATA_IN
AC97_SYNCH
AC97_BIT_CLOCK
AUDIO_AMP_SHUTDOWN
AUDIO_RIGHT
AUDIO_LEFT
R20
10K 5%
C22
MONO
1uF @ 20V
R23
47K 5%
AFILT1
AFLT2
FILT_L
FILT_R
CX3D
RX3D
VREF_OUT
VREF
XTAL_IN
XTAL_OUT
C24
270pF
C25
100nF
C26
C28
47nF
C31
C32
Y1
24.576 MHz
R26
1M0 5%
C29
C30
22pF
R27
C33
C34
XILINX INC. 2100 Logic Drive San Jose California USA 95124
Title
AC97 AUDIO PROCESSOR
Size
B
Document Number
0381112 Microblaze & Multimedia Demonstration Board
Rick Ballantyne Xilinx Labs
Rev
01
Date: Tuesday, October 22, 2002
Sheet 2 of 35

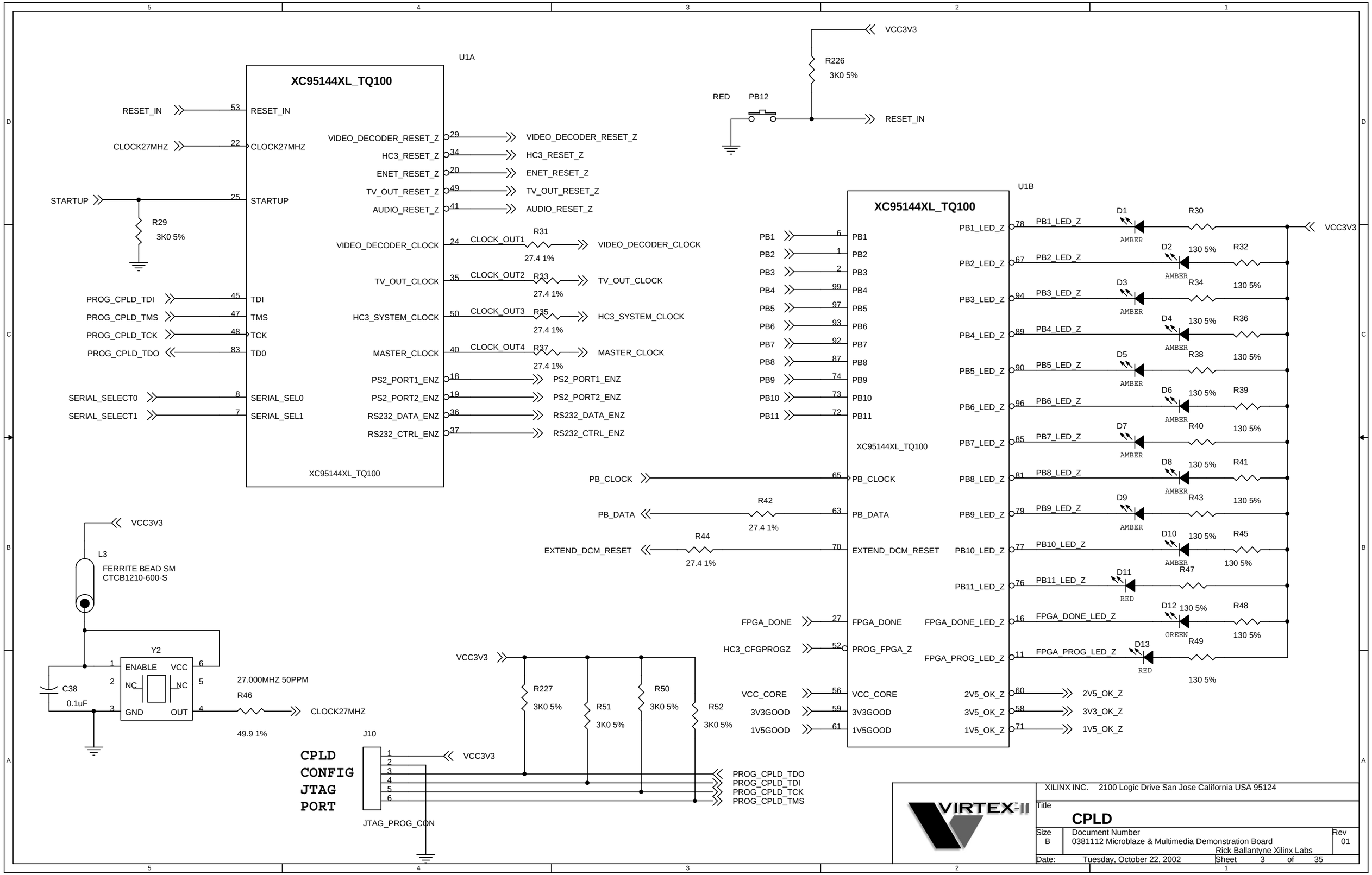
U1A
XC95144XL_TQ100
RESET_IN
CLOCK27MHZ
STARTUP
R29
3K0 5%
PROG_CPLD_TDI
PROG_CPLD_TMS
PROG_CPLD_TCK
PROG_CPLD_TDO
SERIAL_SELECT0
SERIAL_SELECT1
VIDEO_DECODER_RESET_Z
HC3_RESET_Z
ENET_RESET_Z
TV_OUT_RESET_Z
AUDIO_RESET_Z
VIDEO_DECODER_CLOCK
TV_OUT_CLOCK
HC3_SYSTEM_CLOCK
MASTER_CLOCK
PS2_PORT1_ENZ
PS2_PORT2_ENZ
RS232_DATA_ENZ
RS232_CTRL_ENZ
CLOCK_OUT1
CLOCK_OUT2
CLOCK_OUT3
CLOCK_OUT4
R31
R33
R35
R37
27.4 1%
VCC3V3
R226
3K0 5%
RED
PB12
U1B
PB_CLOCK
PB_DATA
EXTEND_DCM_RESET
R42
R44
FPGA_DONE
HC3_CFGPROGZ
VCC_CORE
3V3GOOD
1V5GOOD
PB1_LED_Z
PB2_LED_Z
PB3_LED_Z
PB4_LED_Z
PB5_LED_Z
PB6_LED_Z
PB7_LED_Z
PB8_LED_Z
PB9_LED_Z
PB10_LED_Z
PB11_LED_Z
FPGA_DONE_LED_Z
FPGA_PROG_LED_Z
2V5_OK_Z
3V3_OK_Z
1V5_OK_Z
D1
D2
D3
D4
D5
D6
D7
D8
D9
D10
D11
D12
D13
AMBER
GREEN
RED
R30
R32
R34
R36
R38
R39
R40
R41
R43
R45
R47
R48
R49
130 5%
L3
FERRITE BEAD SM
CTCB1210-600-S
Y2
ENABLE
VCC
NC
GND
OUT
C38
0.1uF
27.000MHZ 50PPM
R46
49.9 1%
CLOCK27MHZ
R227
R51
R50
R52
3K0 5%
J10
CPLD
CONFIG
JTAG
PORT
JTAG_PROG_CON
PROG_CPLD_TDO
PROG_CPLD_TDI
PROG_CPLD_TCK
PROG_CPLD_TMS
VIRTEX-II
XILINX INC. 2100 Logic Drive San Jose California USA 95124
Title
CPLD
Size
B
Document Number
0381112 Microblaze & Multimedia Demonstration Board
Rick Ballantyne Xilinx Labs
Rev
01
Date: Tuesday, October 22, 2002
Sheet 3 of 35

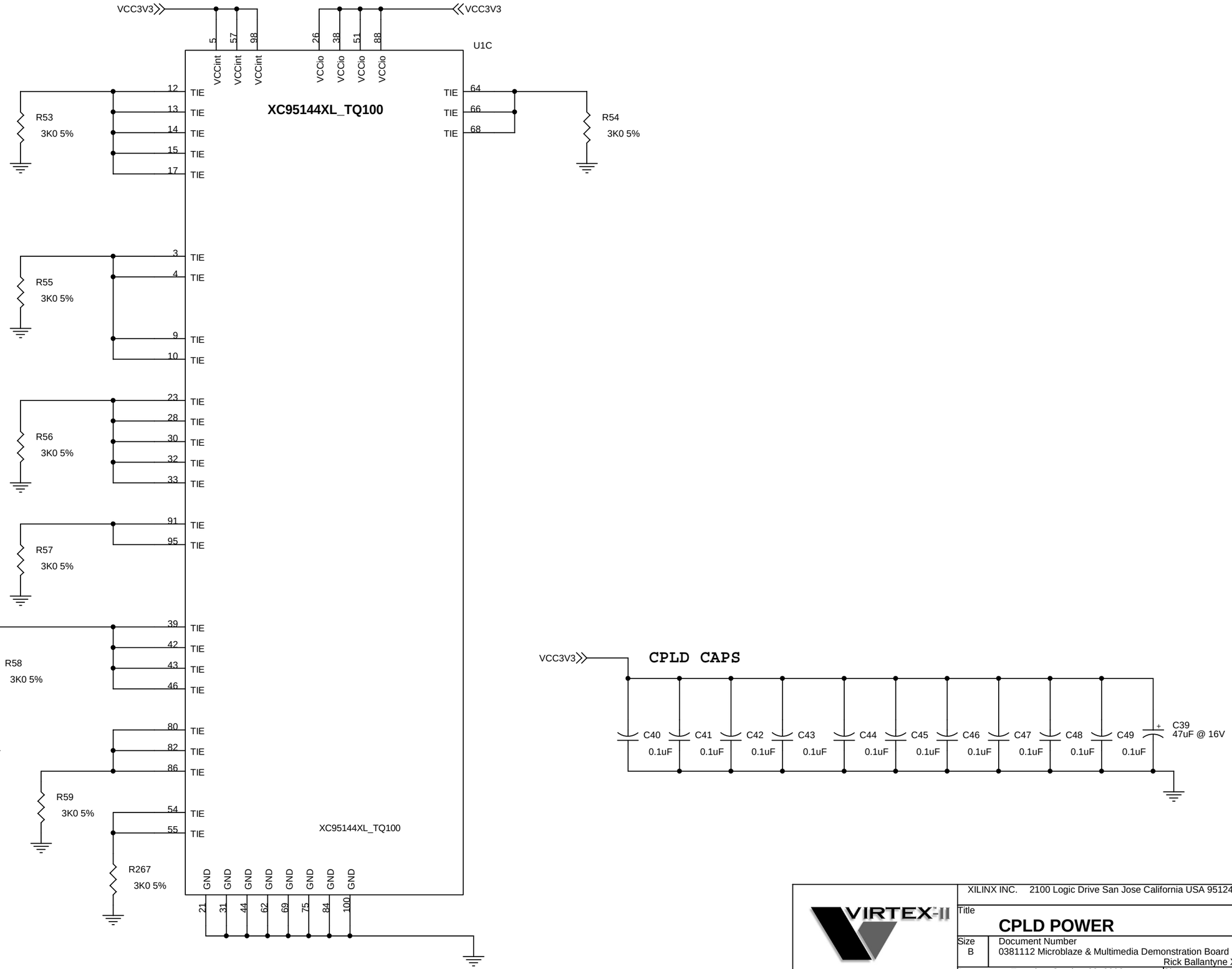

XILINX INC. 2100 Logic Drive San Jose California USA 95124

Title

CPLD POWER

Size	Document Number	Rev
B	0381112 Microblaze & Multimedia Demonstration Board Rick Ballantyne Xilinx Labs	01

Date: Tuesday, October 22, 2002 Sheet 4 of 35

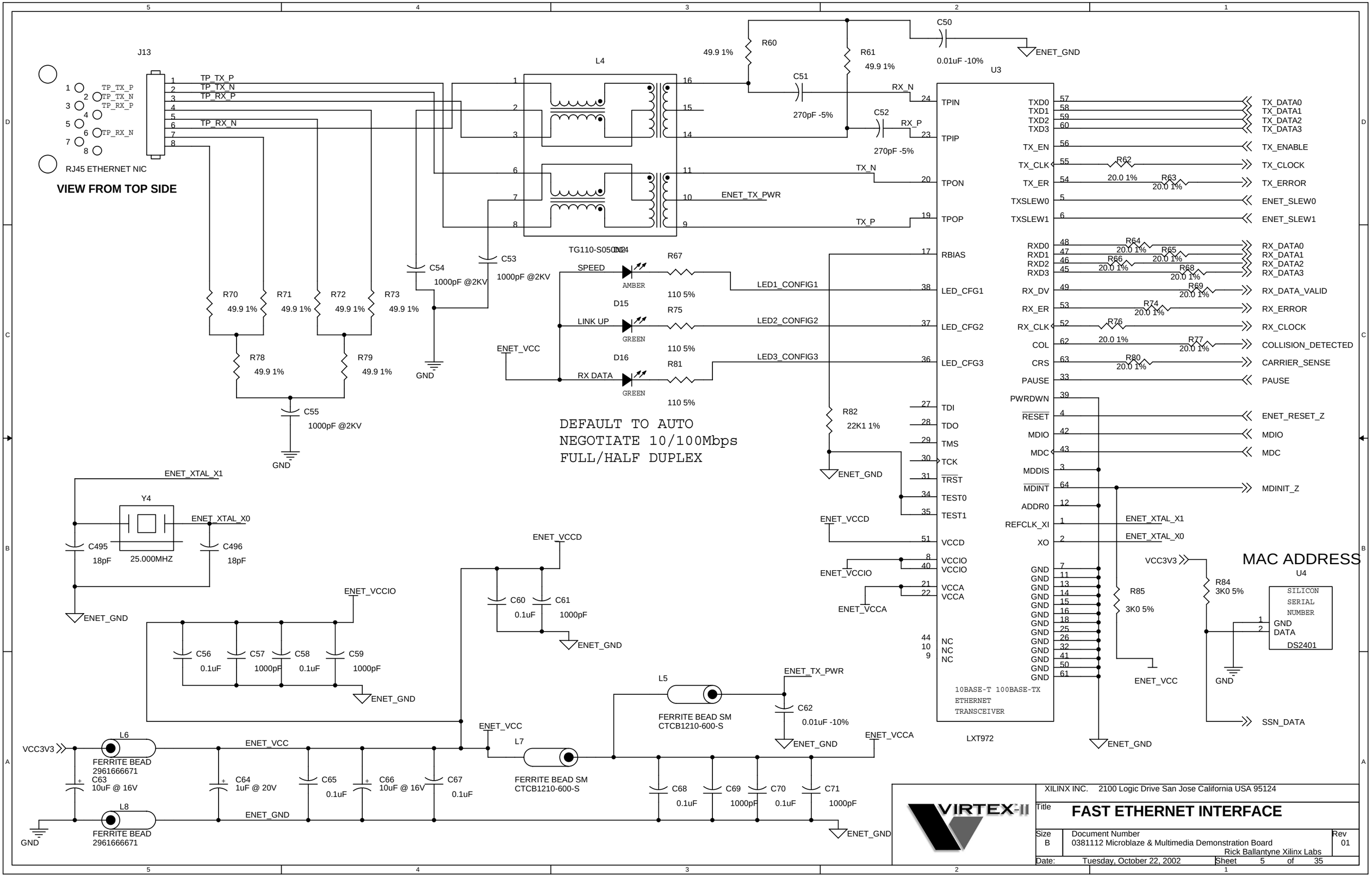
J13
RJ45 ETHERNET NIC
VIEW FROM TOP SIDE
TP_TX_P
TP_TX_N
TP_RX_P
TP_RX_N
L4
TG110-S050N2
R60
49.9 1%
R61
49.9 1%
C50
0.01uF -10%
ENET_GND
C51
270pF -5%
C52
270pF -5%
RX_N
RX_P
TX_N
TX_P
ENET_TX_PWR
U3
TPIN
TPIP
TPON
TPOP
RBIAS
LED_CFG1
LED_CFG2
LED_CFG3
TDI
TDO
TMS
TCK
TRST
TEST0
TEST1
VCCD
VCCIO
VCCA
NC
10BASE-T 100BASE-TX
ETHERNET
TRANSCEIVER
LXT972
TXD0
TXD1
TXD2
TXD3
TX_EN
TX_CLK
TX_ER
TXSLEW0
TXSLEW1
RXD0
RXD1
RXD2
RXD3
RX_DV
RX_ER
RX_CLK
COL
CRS
PAUSE
PWRDWN
RESET
MDIO
MDC
MDDIS
MDINT
ADDR0
REFCLK_XI
XO
GND
TX_DATA0
TX_DATA1
TX_DATA2
TX_DATA3
TX_ENABLE
TX_CLOCK
TX_ERROR
ENET_SLEW0
ENET_SLEW1
RX_DATA0
RX_DATA1
RX_DATA2
RX_DATA3
RX_DATA_VALID
RX_ERROR
RX_CLOCK
COLLISION_DETECTED
CARRIER_SENSE
PAUSE
ENET_RESET_Z
MDIO
MDC
MDINIT_Z
ENET_XTAL_X1
ENET_XTAL_X0
R62
20.0 1%
R63
20.0 1%
R64
20.0 1%
R65
20.0 1%
R66
20.0 1%
R68
20.0 1%
R69
20.0 1%
R74
20.0 1%
R76
20.0 1%
R77
20.0 1%
R80
20.0 1%
R70
49.9 1%
R71
49.9 1%
R72
49.9 1%
R73
49.9 1%
R78
49.9 1%
R79
49.9 1%
C54
1000pF @2KV
C53
1000pF @2KV
C55
1000pF @2KV
GND
D14
SPEED
AMBER
R67
110 5%
LED1_CONFIG1
D15
LINK UP
GREEN
R75
110 5%
LED2_CONFIG2
D16
RX DATA
GREEN
R81
110 5%
LED3_CONFIG3
ENET_VCC
DEFAULT TO AUTO
NEGOTIATE 10/100Mbps
FULL/HALF DUPLEX
R82
22K1 1%
ENET_GND
ENET_VCCD
ENET_VCCIO
ENET_VCCA
Y4
ENET_XTAL_X1
ENET_XTAL_X0
C495
18pF
25.000MHZ
C496
18pF
ENET_GND
ENET_VCCIO
C56
0.1uF
C57
1000pF
C58
0.1uF
C59
1000pF
ENET_GND
ENET_VCCD
C60
0.1uF
C61
1000pF
ENET_GND
VCC3V3
R85
3K0 5%
ENET_VCC
R84
3K0 5%
MAC ADDRESS
U4
SILICON
SERIAL
NUMBER
GND
DATA
DS2401
GND
SSN_DATA
ENET_GND
L5
FERRITE BEAD SM
CTCB1210-600-S
ENET_TX_PWR
C62
0.01uF -10%
ENET_GND
ENET_VCCA
L6
FERRITE BEAD
2961666671
VCC3V3
ENET_VCC
C63
10uF @ 16V
C64
1uF @ 20V
C65
0.1uF
C66
10uF @ 16V
C67
0.1uF
L7
FERRITE BEAD SM
CTCB1210-600-S
C68
0.1uF
C69
1000pF
C70
0.1uF
C71
1000pF
ENET_GND
L8
FERRITE BEAD
2961666671
GND
ENET_GND
VIRTEX-II
XILINX INC. 2100 Logic Drive San Jose California USA 95124
Title
FAST ETHERNET INTERFACE
Size
B
Document Number
0381112 Microblaze & Multimedia Demonstration Board
Rick Ballantyne Xilinx Labs
Rev
01
Date: Tuesday, October 22, 2002
Sheet 5 of 35

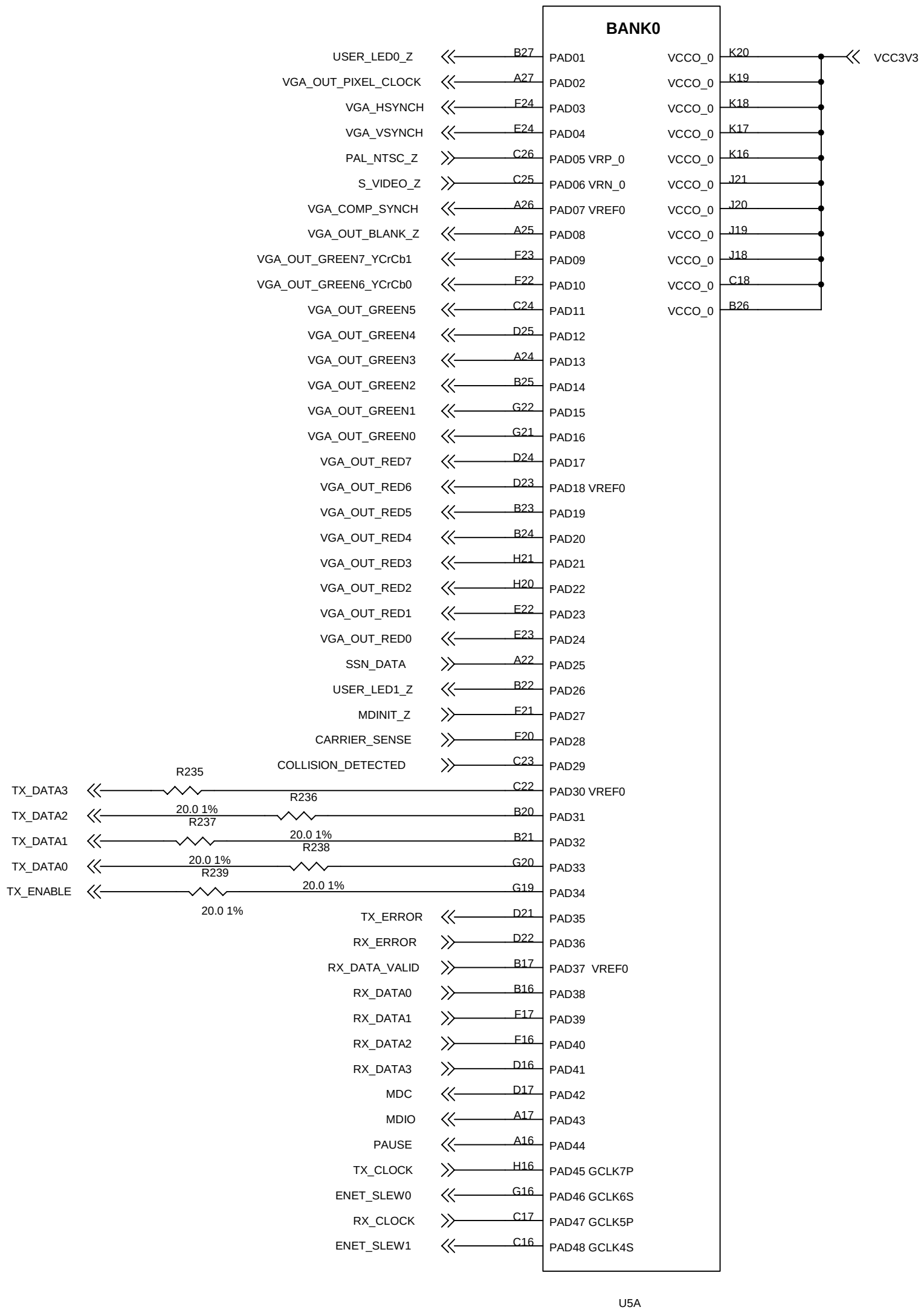

XILINX INC. 2100 Logic Drive San Jose California USA 95124

Title

FPGA BANK0 CONNECTIONS

Size	Document Number	Rev
	0381112 Microblaze & Multimedia Demonstration Board Rick Ballantyne Xilinx Labs	01

Date: Tuesday, October 22, 2002 Sheet 6 of 35

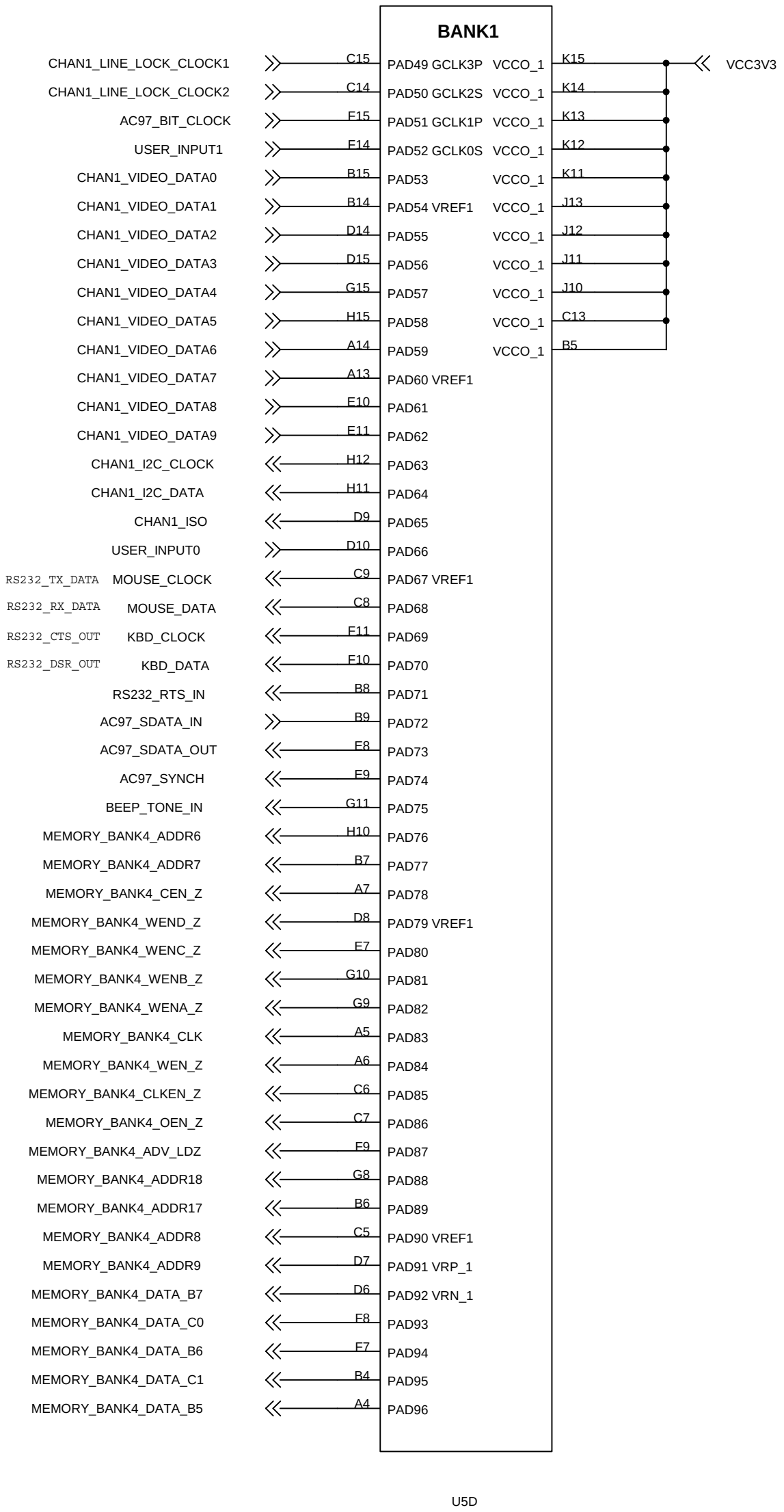

XILINX INC. 2100 Logic Drive San Jose California USA 95124

Title

FPGA BANK1CONNECTIONS

Size	Document Number	Rev
	0381112 Microblaze & Multimedia Demonstration Board Rick Ballantyne Xilinx Labs	01

Date: Tuesday, October 22, 2002 Sheet 7 of 35

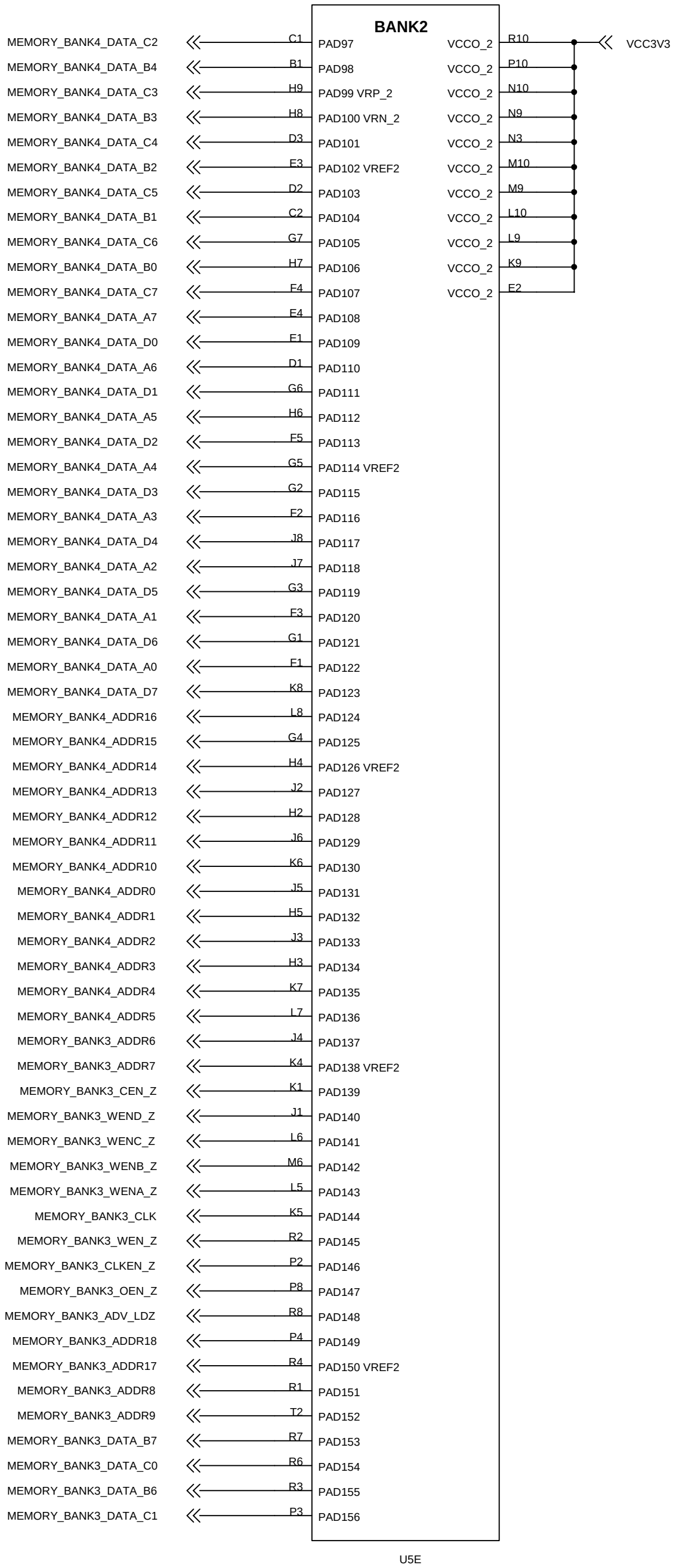

XILINX INC. 2100 Logic Drive San Jose California USA 95124

Title

FPGA BANK2 CONNECTIONS

Size	Document Number	Rev
	0381112 Microblaze & Multimedia Demonstration Board Rick Ballantyne Xilinx Labs	01

Date: Tuesday, October 22, 2002 Sheet 8 of 35

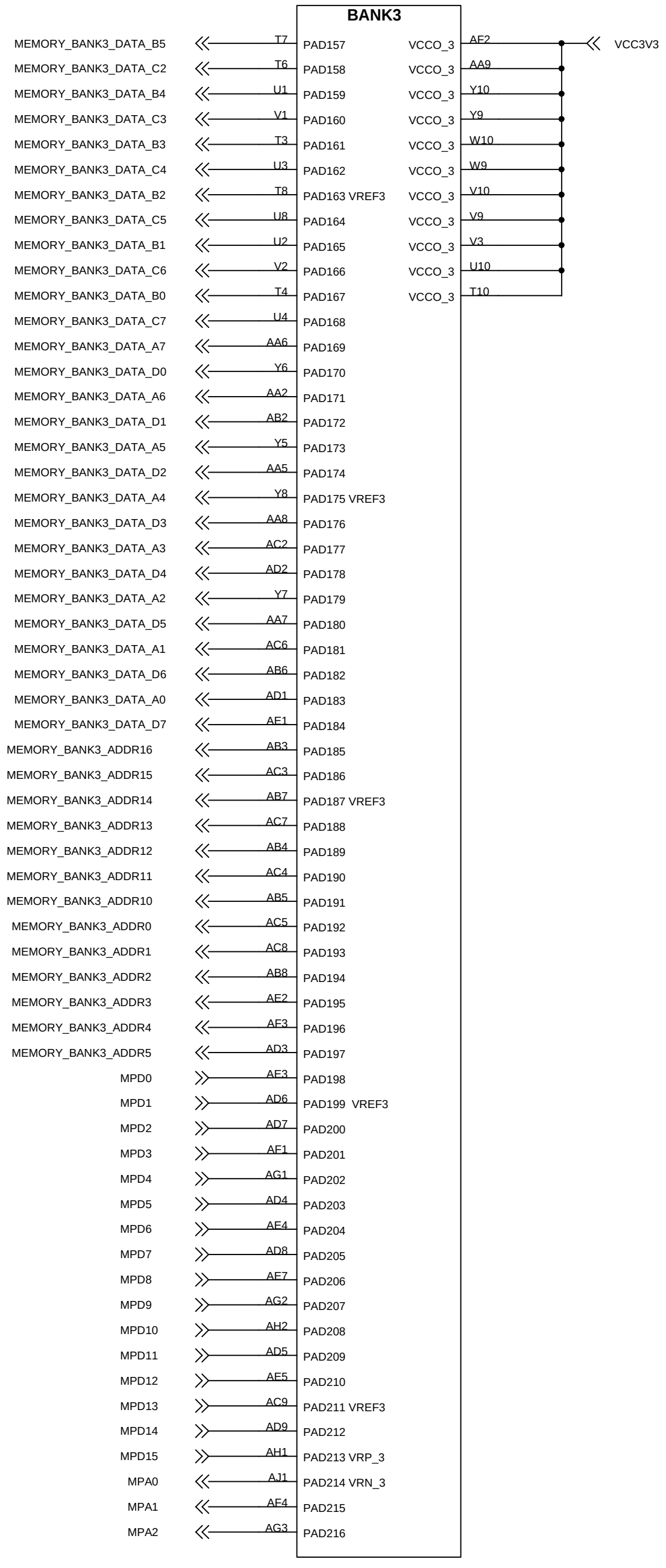

XILINX INC. 2100 Logic Drive San Jose California USA 95124

Title

FPGA BANK3 CONNECTIONS

Size	Document Number	Rev
	0381112 Microblaze & Multimedia Demonstration Board Rick Ballantyne Xilinx Labs	01

Date: Tuesday, October 22, 2002 Sheet 9 of 35

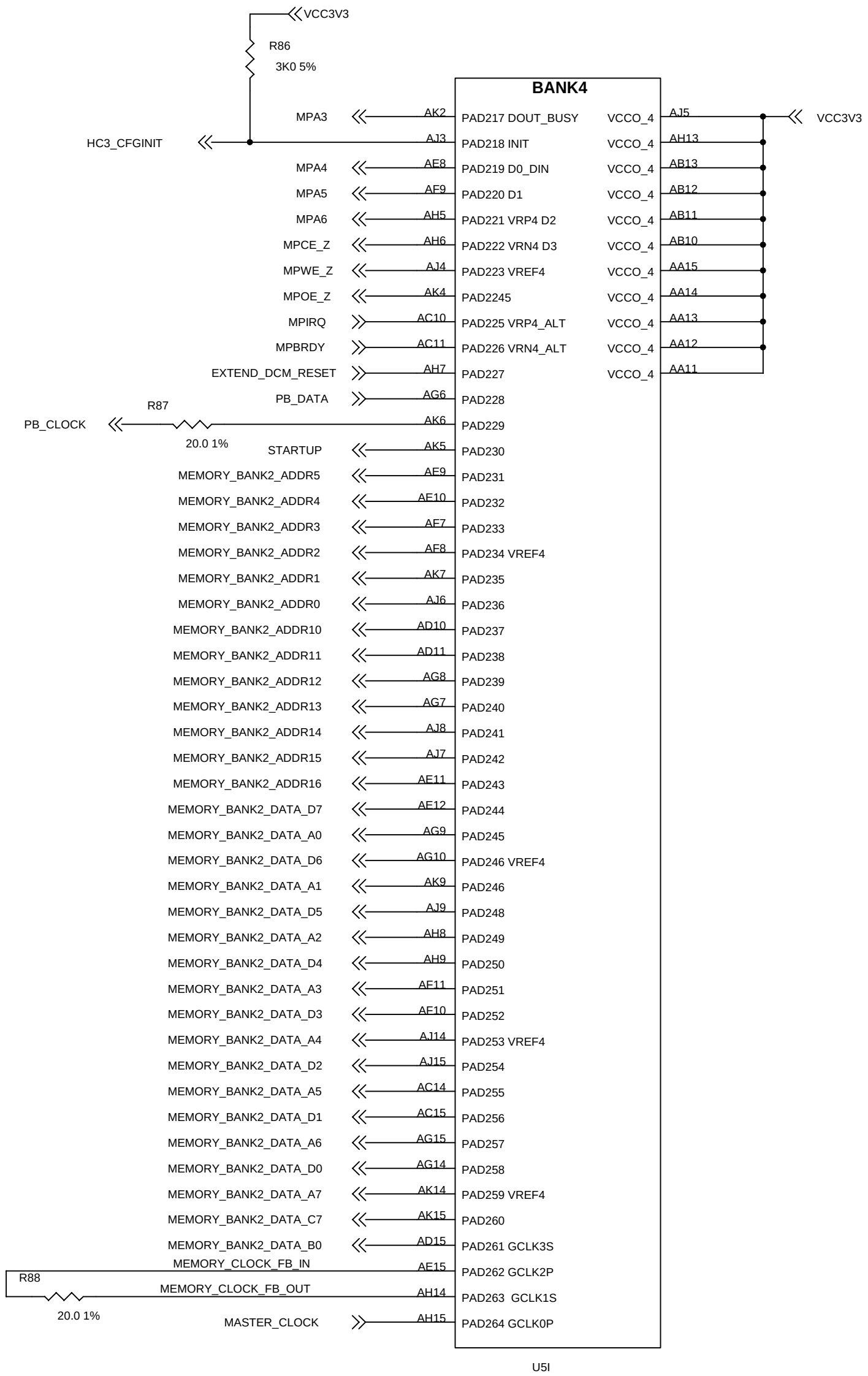

XILINX INC. 2100 Logic Drive San Jose California USA 95124

Title

FPGA BANK4 CONNECTIONS

Size | Document Number: 0381112 Microblaze & Multimedia Demonstration Board | Rev 01

Rick Ballantyne Xilinx Labs

Date: Tuesday, October 22, 2002 | Sheet 10 of 35

XILINX INC. 2100 Logic Drive San Jose California USA 95124

Title

FPGA BANK5 CONNECTIONS

Size

Document Number
0381112 Microblaze & Multimedia Demonstration Board
Rick Ballantyne Xilinx Labs

Rev 01

Date: Tuesday, October 22, 2002

Sheet 11 of 35

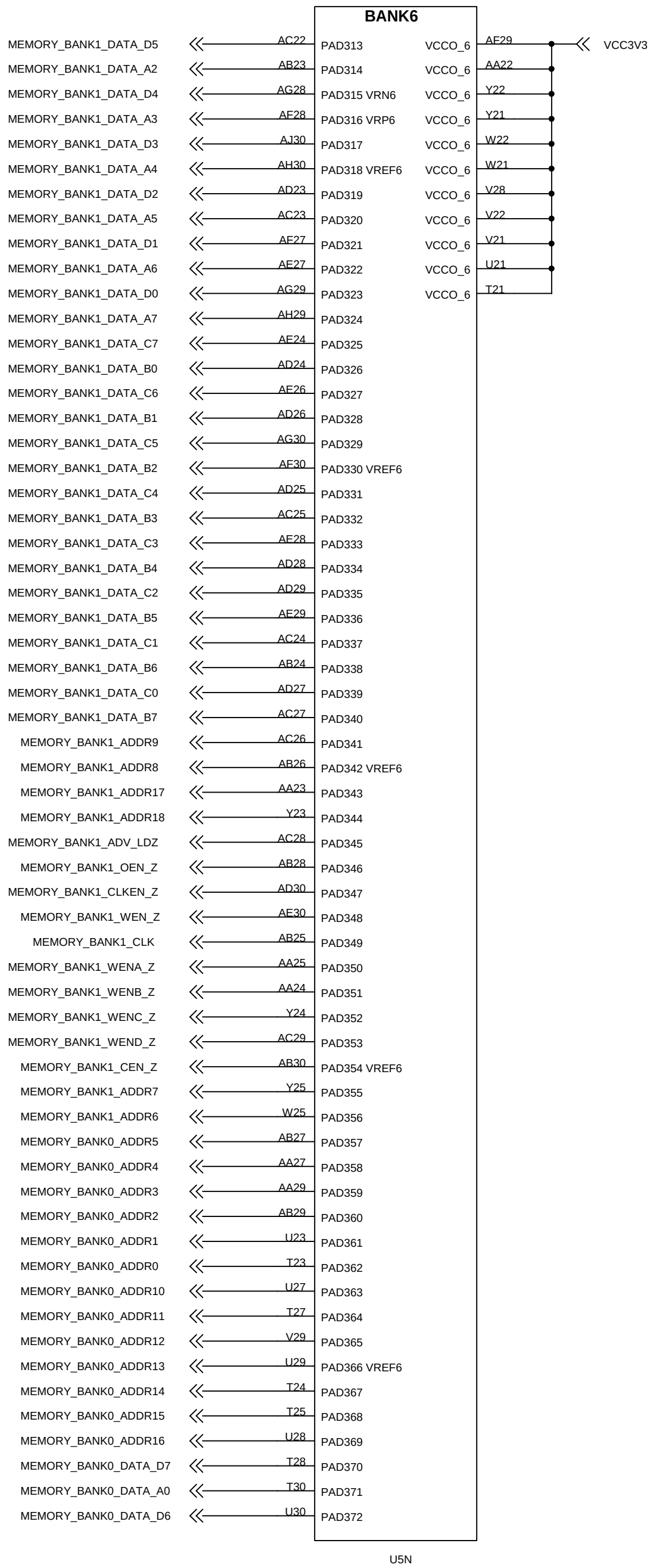

XILINX INC.
2100 Logic Drive San Jose California USA 95124

Title
FPGA BANK6 CONNECTIONS

Size	Document Number	Rev
	0381112 Microblaze & Multimedia Demonstration Board Rick Ballantyne Xilinx Labs	01

Date: Tuesday, October 22, 2002 Sheet 12 of 35

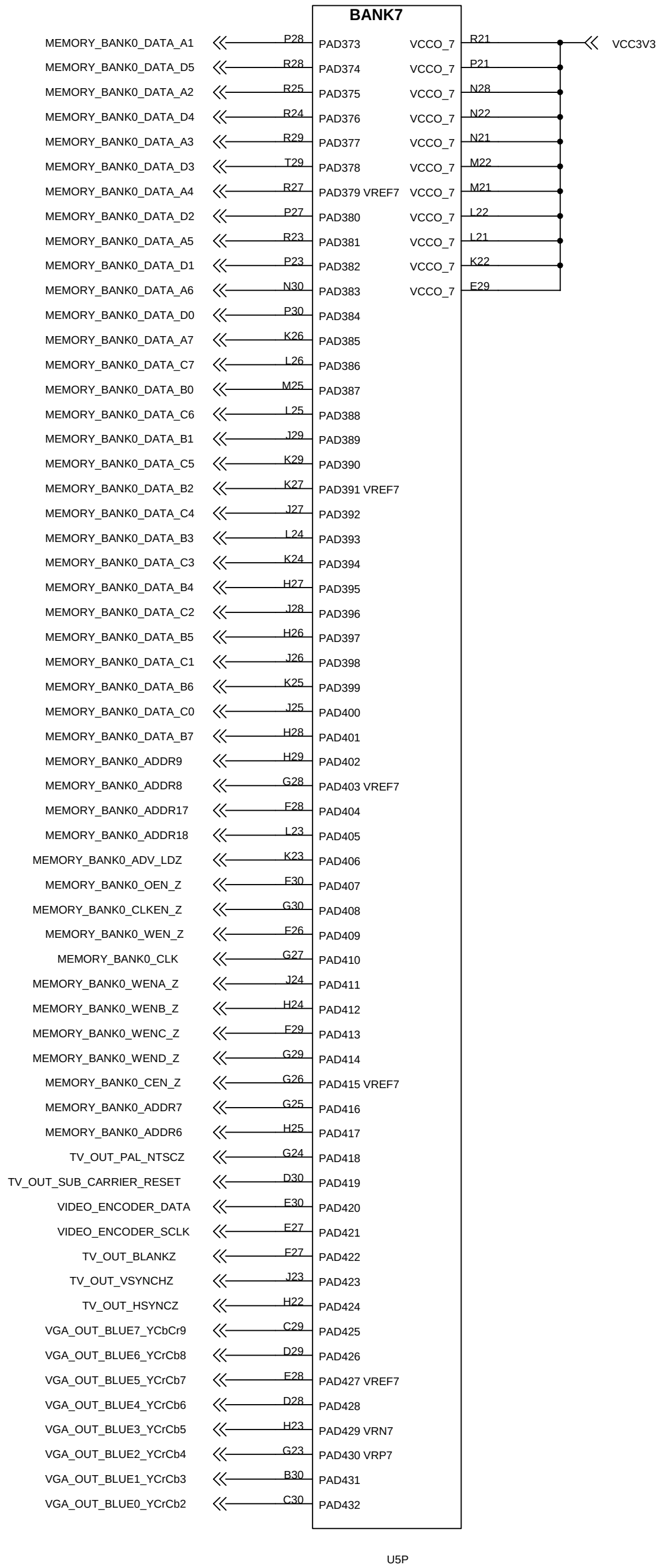

XILINX INC. 2100 Logic Drive San Jose California USA 95124

Title

FPGA BANK 7 CONNECTIONS

Size | Document Number: 0381112 Microblaze & Multimedia Demonstration Board, Rick Ballantyne Xilinx Labs | Rev 01

Date: Tuesday, October 22, 2002 | Sheet 13 of 35

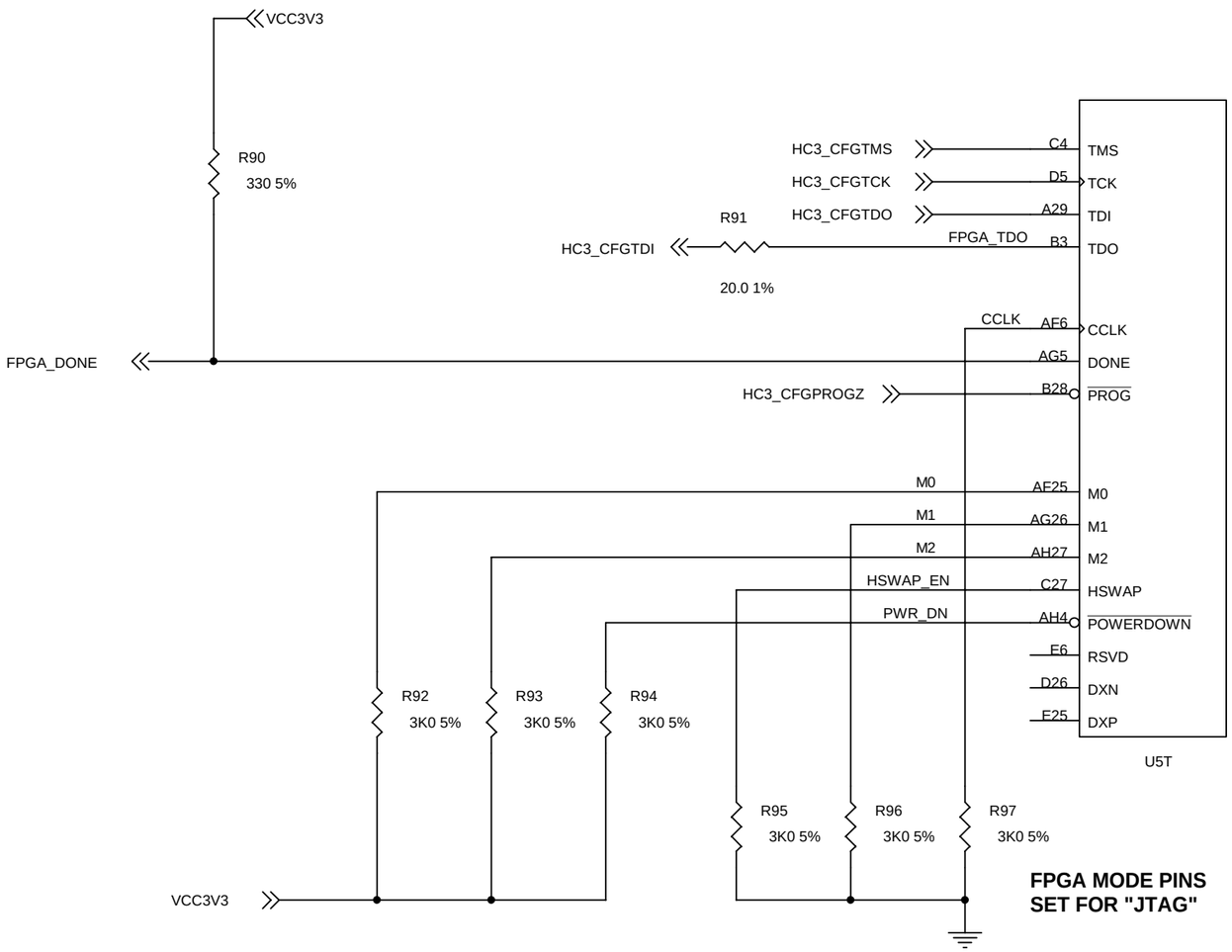

XILINX INC. 2100 Logic Drive San Jose California USA 95124

Title
FPGA CONFIGURATION

Size	Document Number	Rev
B	0381112 Microblaze & Multimedia Demonstration Board Rick Ballantyne Xilinx Labs	01

Date: Tuesday, October 22, 2002 Sheet 14 of 35

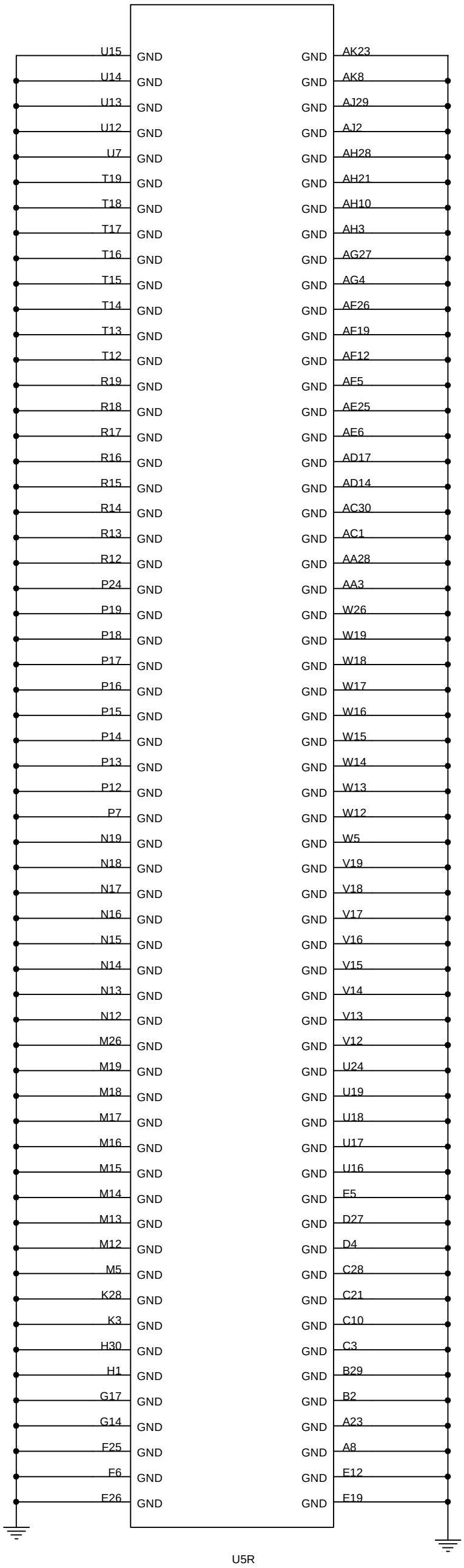

XILINX INC. 2100 Logic Drive San Jose California USA 95124

Title

FPGA GND CONNECTIONS

Size	Document Number	Rev
	0381112 Microblaze & Multimedia Demonstration Board Rick Ballantyne Xilinx Labs	01

Date: Tuesday, October 22, 2002 Sheet 15 of 35

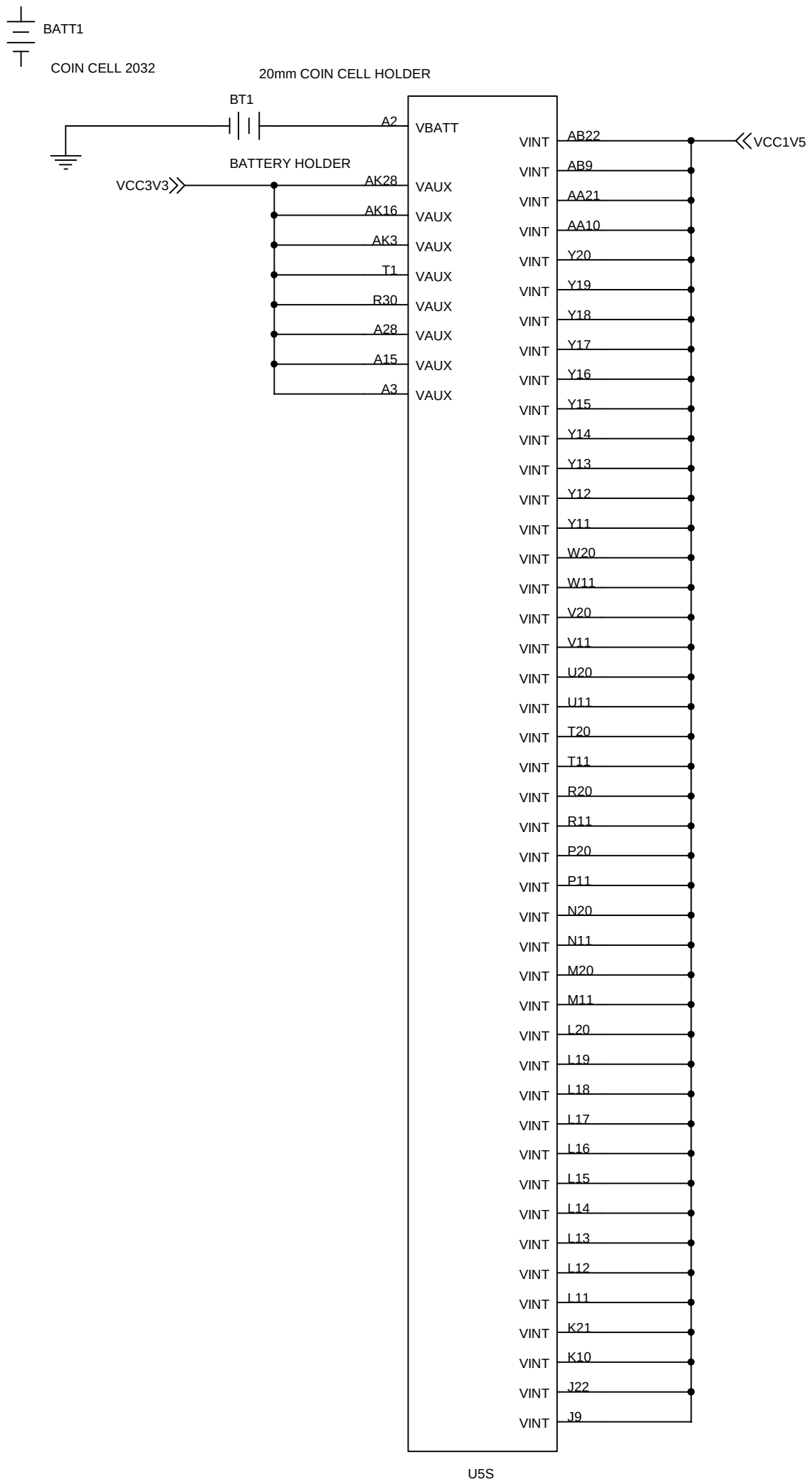

XILINX INC. 2100 Logic Drive San Jose California USA 95124

Title

FPGA POWER CONNECTIONS

Size | Document Number: 0381112 Microblaze & Multimedia Demonstration Board | Rev 01

Rick Ballantyne Xilinx Labs

Date: Tuesday, October 22, 2002 | Sheet 16 of 35

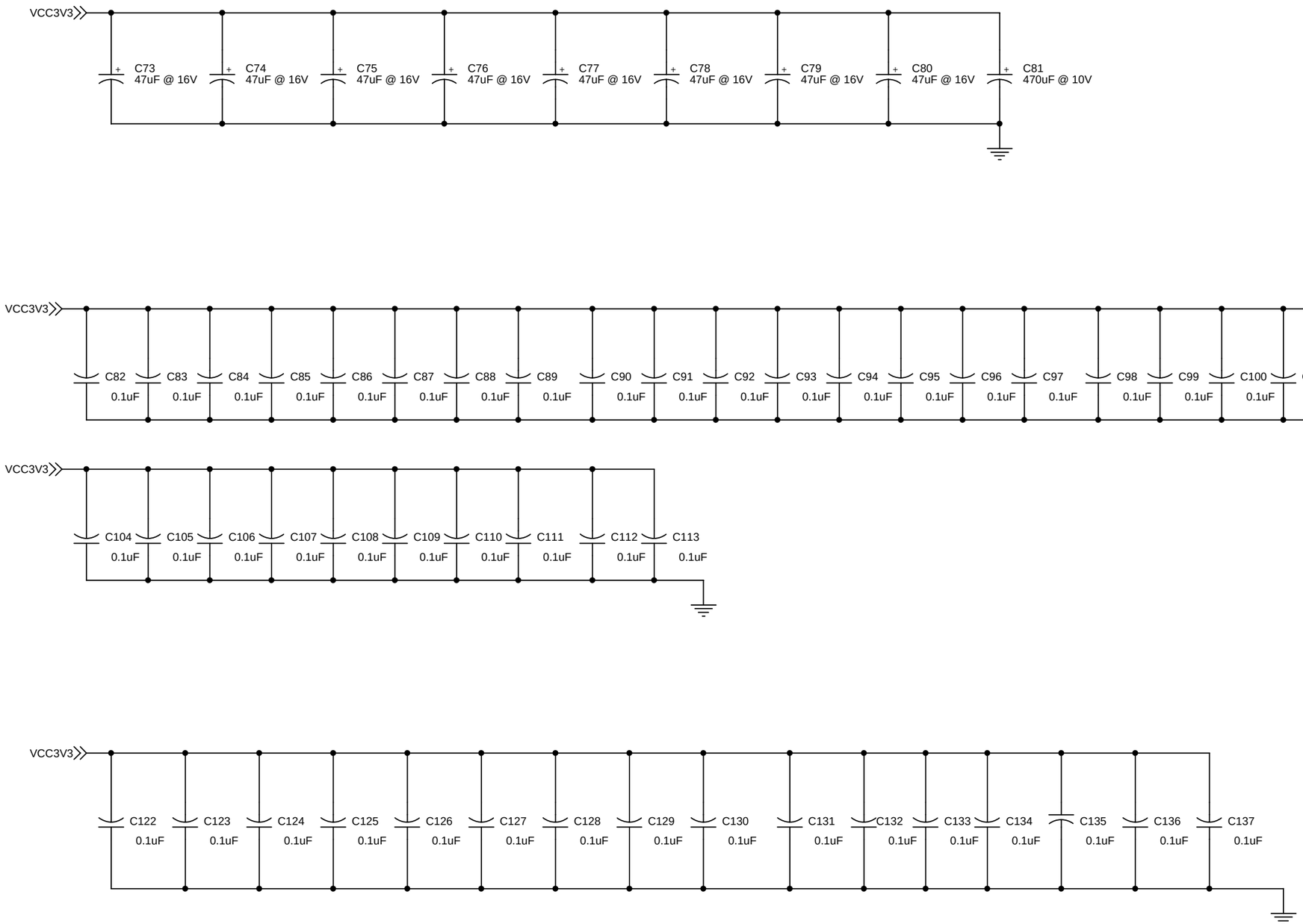

XILINX INC. 2100 Logic Drive San Jose California USA 95124

Title
FPGA VCCO CAPS

Size	Document Number	Rev
B	0381112 Microblaze & Multimedia Demonstration Board Rick Ballantyne Xilinx Labs	01

Date: Tuesday, October 22, 2002 Sheet 17 of 35

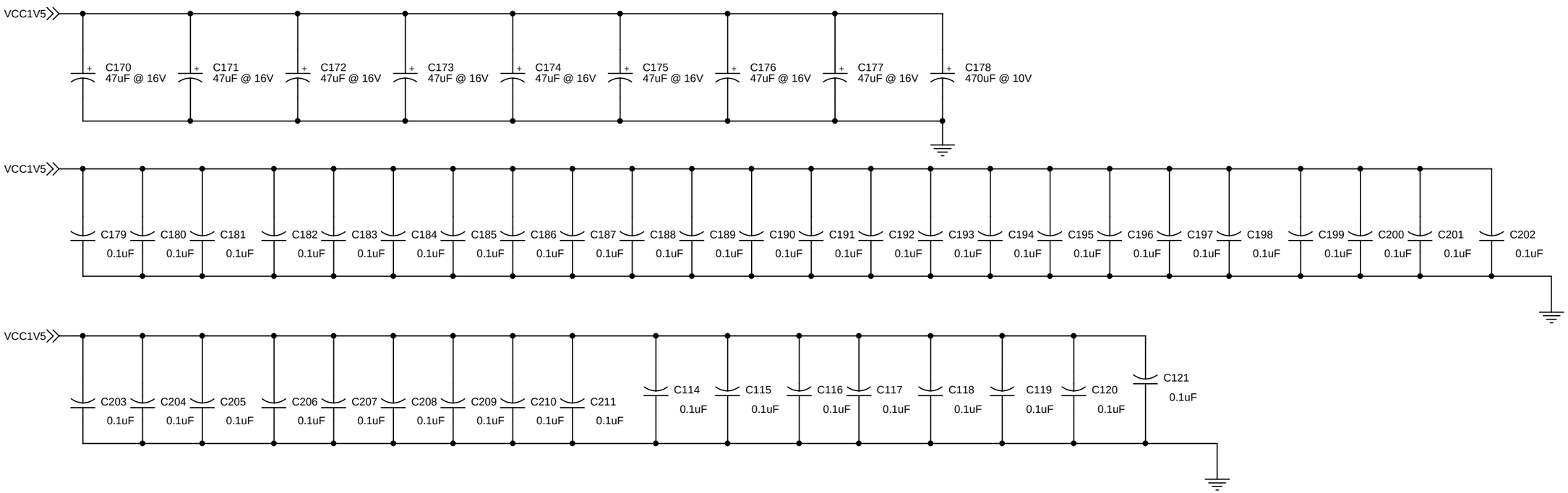

XILINX INC. 2100 Logic Drive San Jose California USA 95124

Title

FPGA VINT AND VAUX CAPS

Size	Document Number	Rev
B	0381112 Microblaze & Multimedia Demonstration Board Rick Ballantyne Xilinx Labs	01

Date: Tuesday, October 22, 2002 Sheet 18 of 35

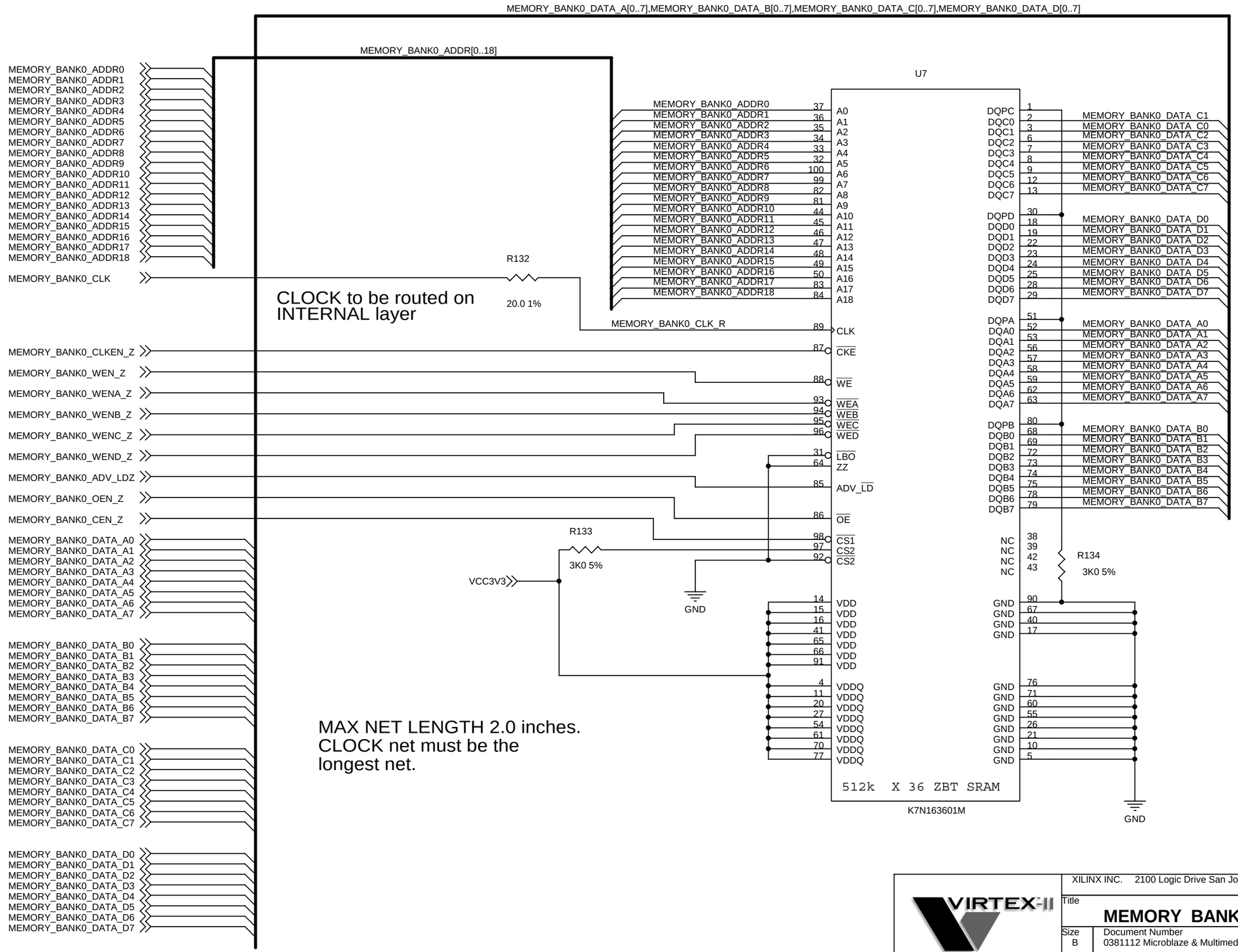

XILINX INC. 2100 Logic Drive San Jose California USA 95124

Title

MEMORY BANK0 512k x 32

Size	Document Number	Rev
B	0381112 Microblaze & Multimedia Demonstration Board Rick Ballantyne Xilinx Labs	01

Date: Tuesday, October 22, 2002 Sheet 19 of 35

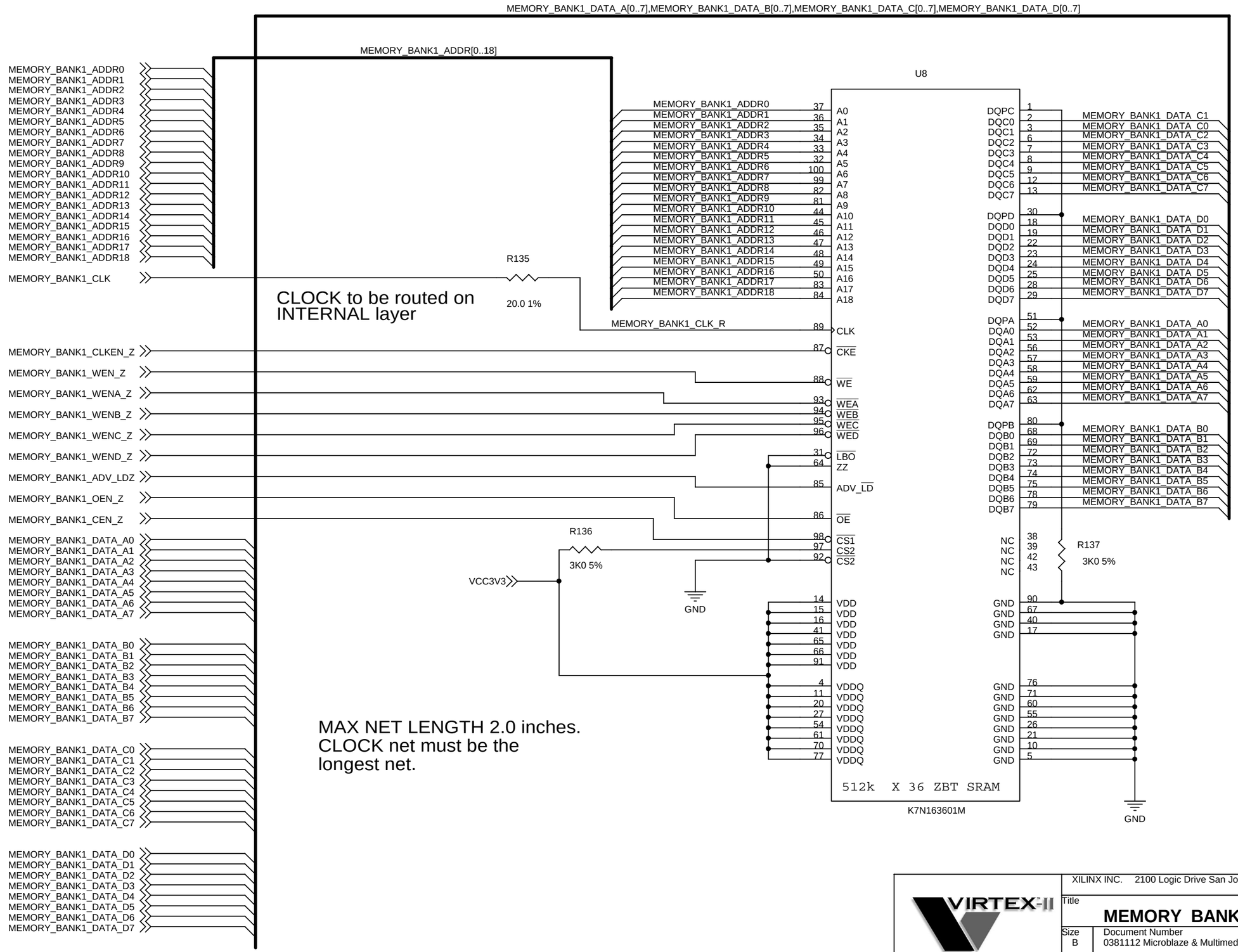

XILINX INC. 2100 Logic Drive San Jose California USA 95124

Title

MEMORY BANK1 512k x 32

Size	Document Number	Rev
B	0381112 Microblaze & Multimedia Demonstration Board Rick Ballantyne Xilinx Labs	01

Date: Tuesday, October 22, 2002 Sheet 20 of 35

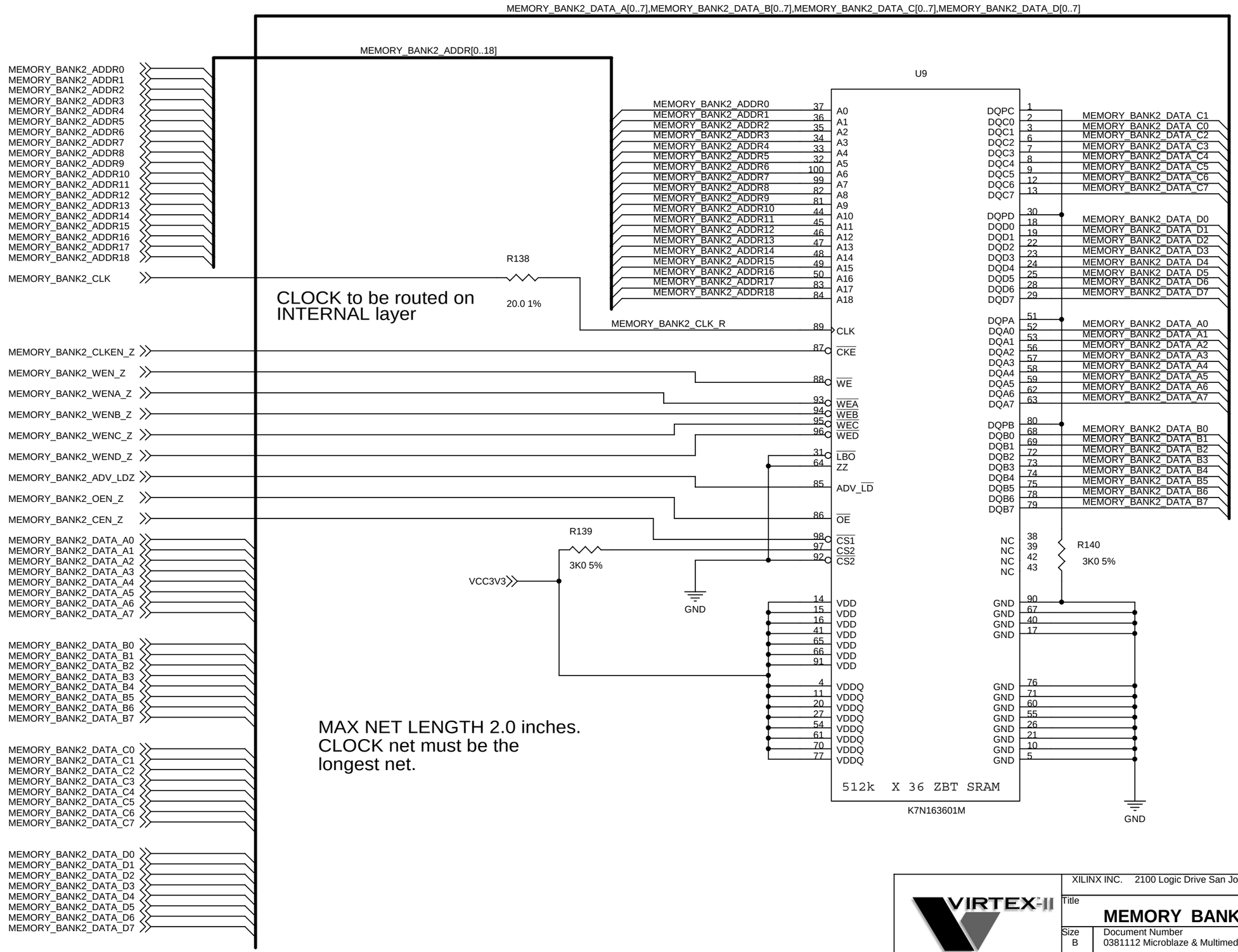

XILINX INC. 2100 Logic Drive San Jose California USA 95124

Title

MEMORY BANK2 512k x 32

Size	Document Number	Rev
B	0381112 Microblaze & Multimedia Demonstration Board Rick Ballantyne Xilinx Labs	01

Date: Tuesday, October 22, 2002 Sheet 21 of 35

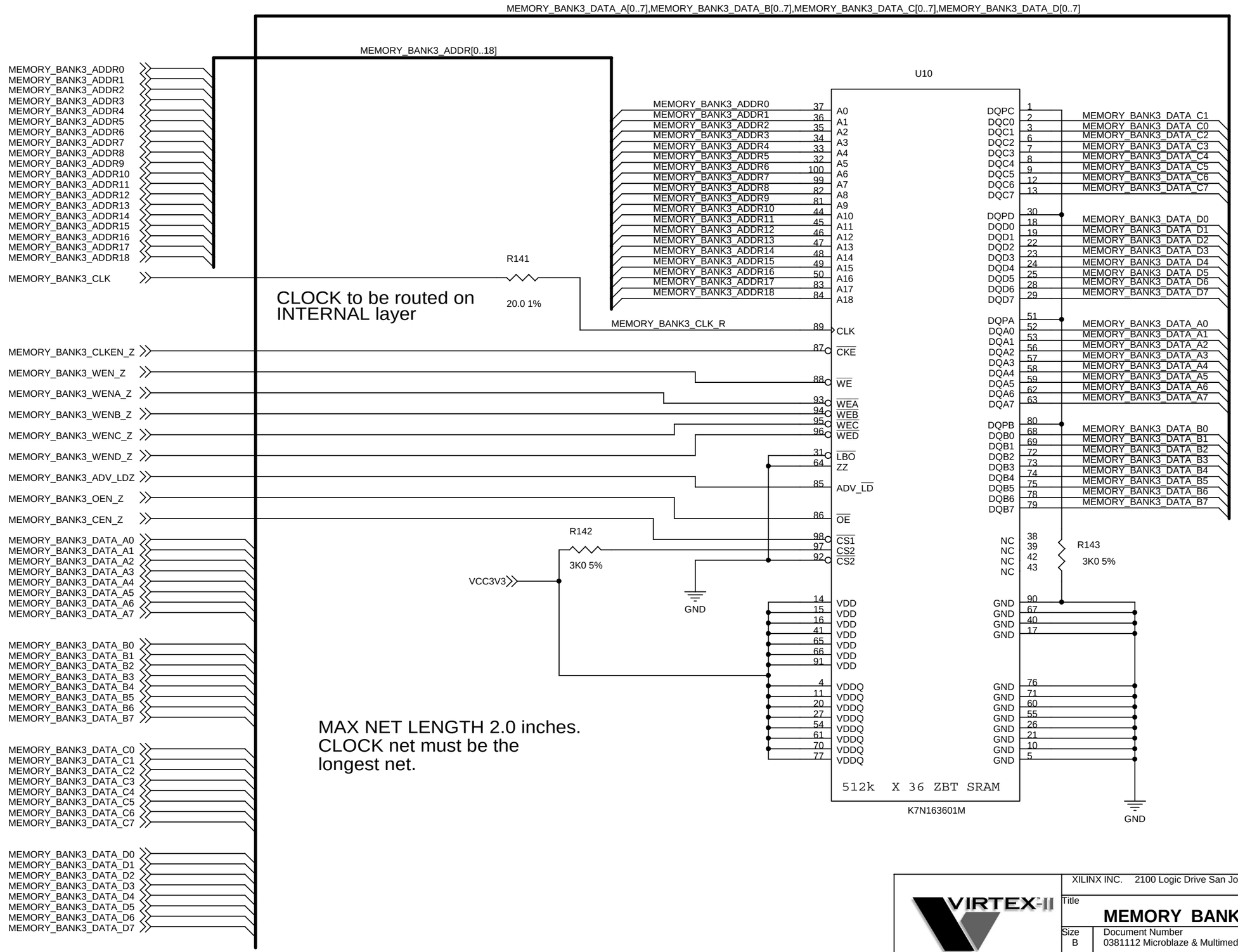

XILINX INC. 2100 Logic Drive San Jose California USA 95124

Title

MEMORY BANK3 512k x 32

Size	Document Number	Rev
B	0381112 Microblaze & Multimedia Demonstration Board Rick Ballantyne Xilinx Labs	01

Date: Tuesday, October 22, 2002 Sheet 22 of 35

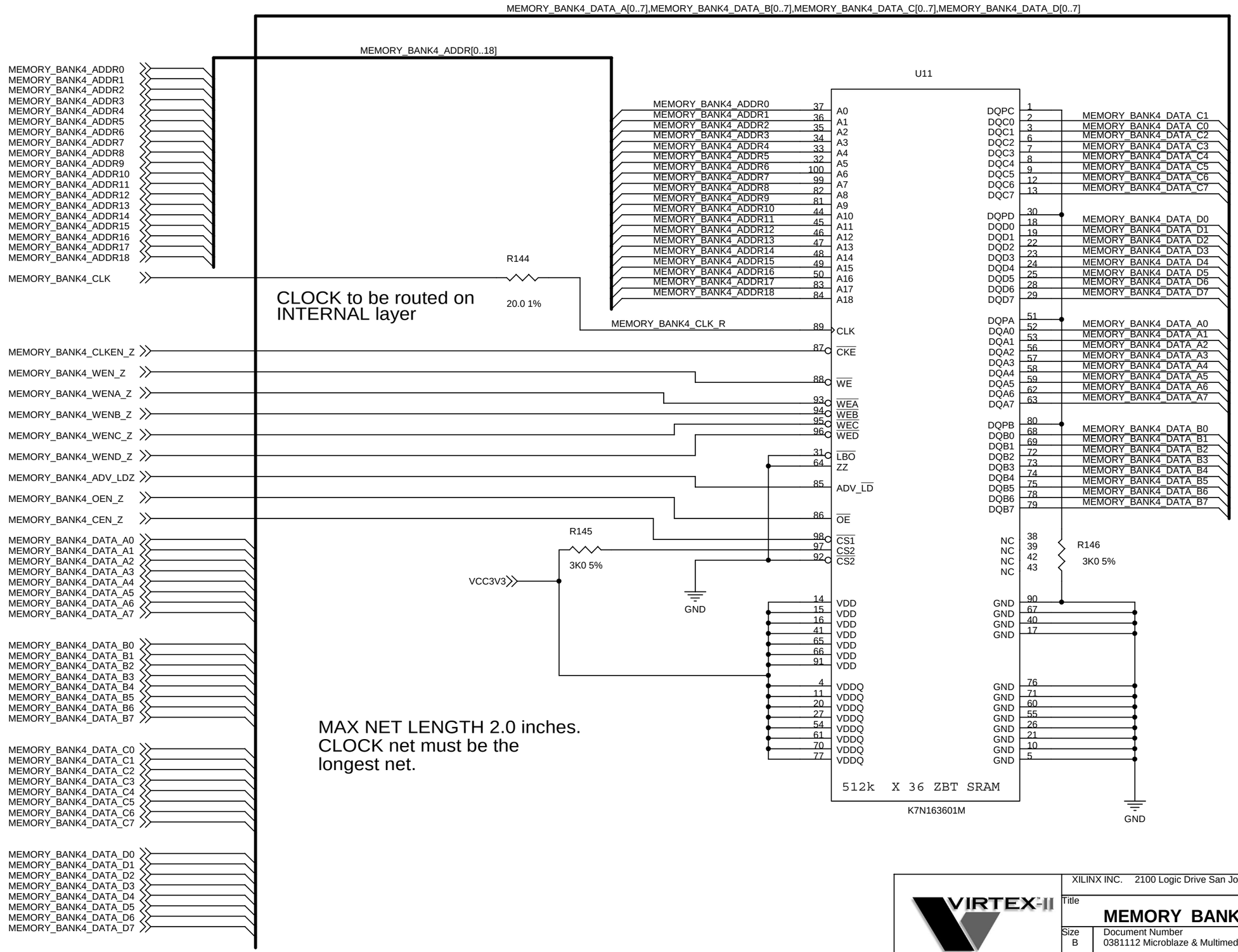

XILINX INC. 2100 Logic Drive San Jose California USA 95124

Title

MEMORY BANK4 512k x 32

Size	Document Number	Rev
B	0381112 Microblaze & Multimedia Demonstration Board Rick Ballantyne Xilinx Labs	01

Date: Tuesday, October 22, 2002 Sheet 23 of 35

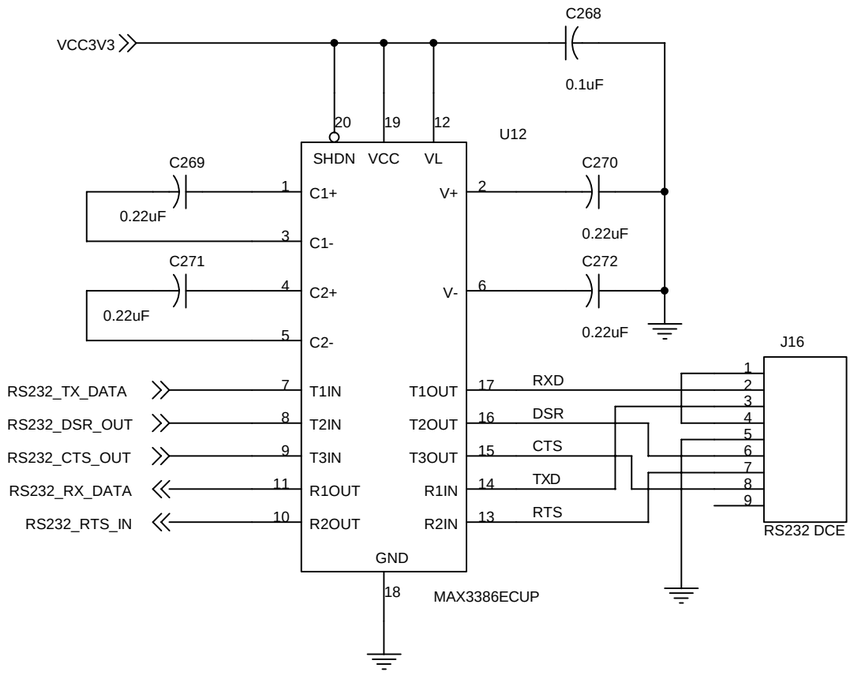

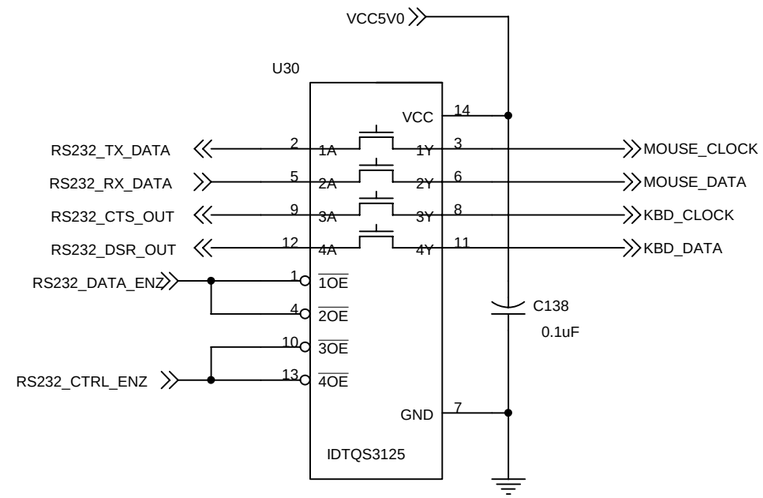

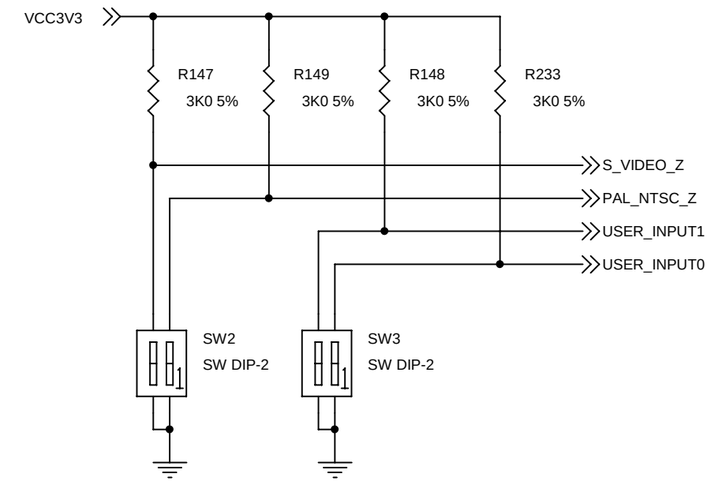

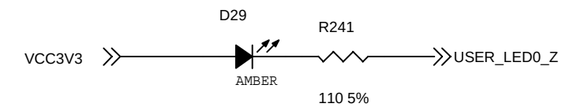

USER LEDs

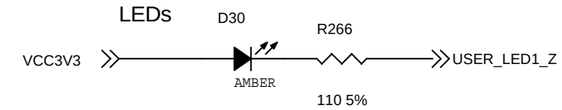

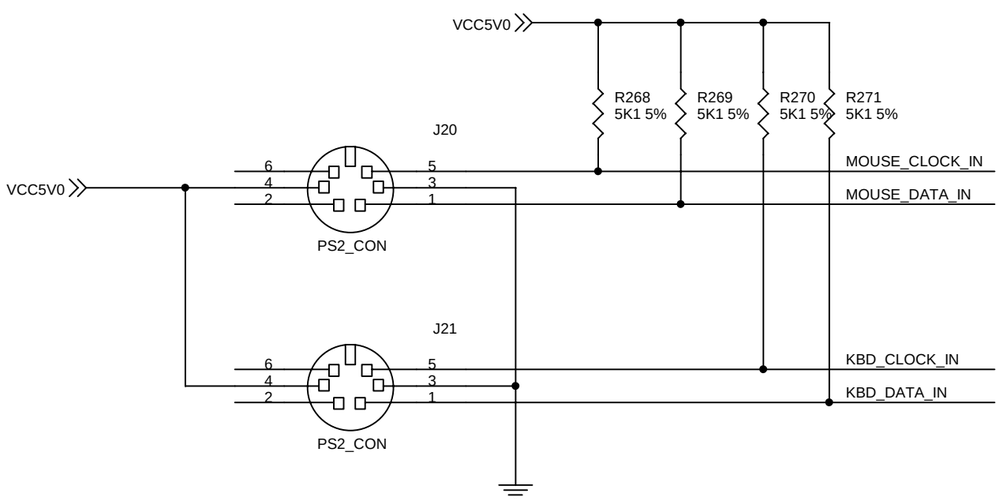

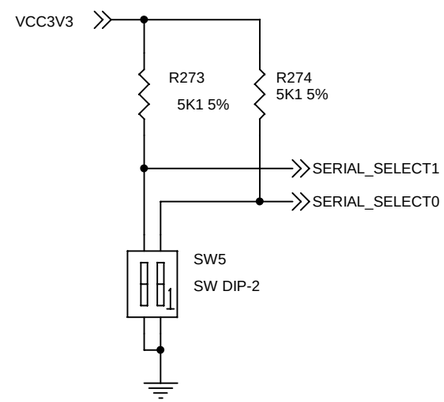

SELECTION OF THE ACTIVE SERIAL PORTS

open	open	serial ports disabled
open	closed	RS232 with handshake
closed	open	PS2 keyboard & RS232 TX RX only
closed	closed	PS2 keyboard & mouse

5V TO 3.3V LEVEL TRANSLATION FOR PS2 PORTS

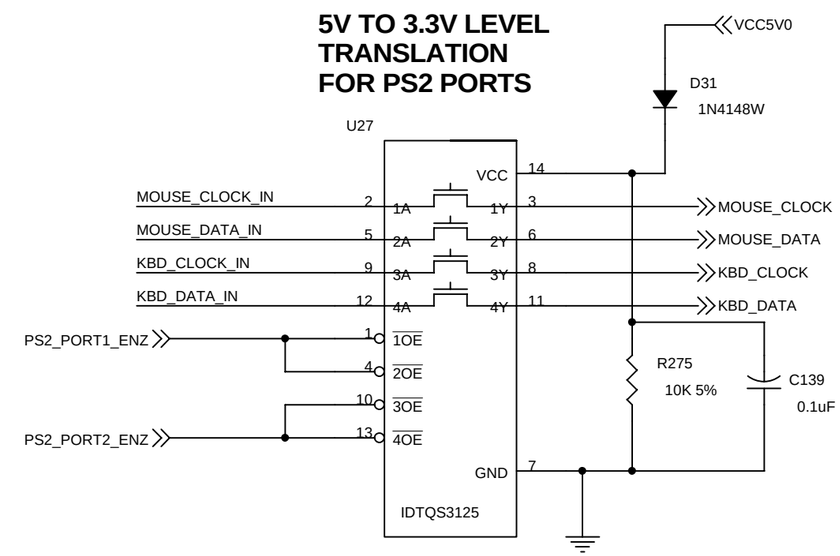

XILINX INC. 2100 Logic Drive San Jose California USA 95124

Title
OPTION SELECTS AND SERIAL PORTS

Size	Document Number	Rev
B	0381112 Microblaze & Multimedia Demonstration Board Rick Ballantyne Xilinx Labs	01

Date: Tuesday, October 22, 2002 Sheet 24 of 35

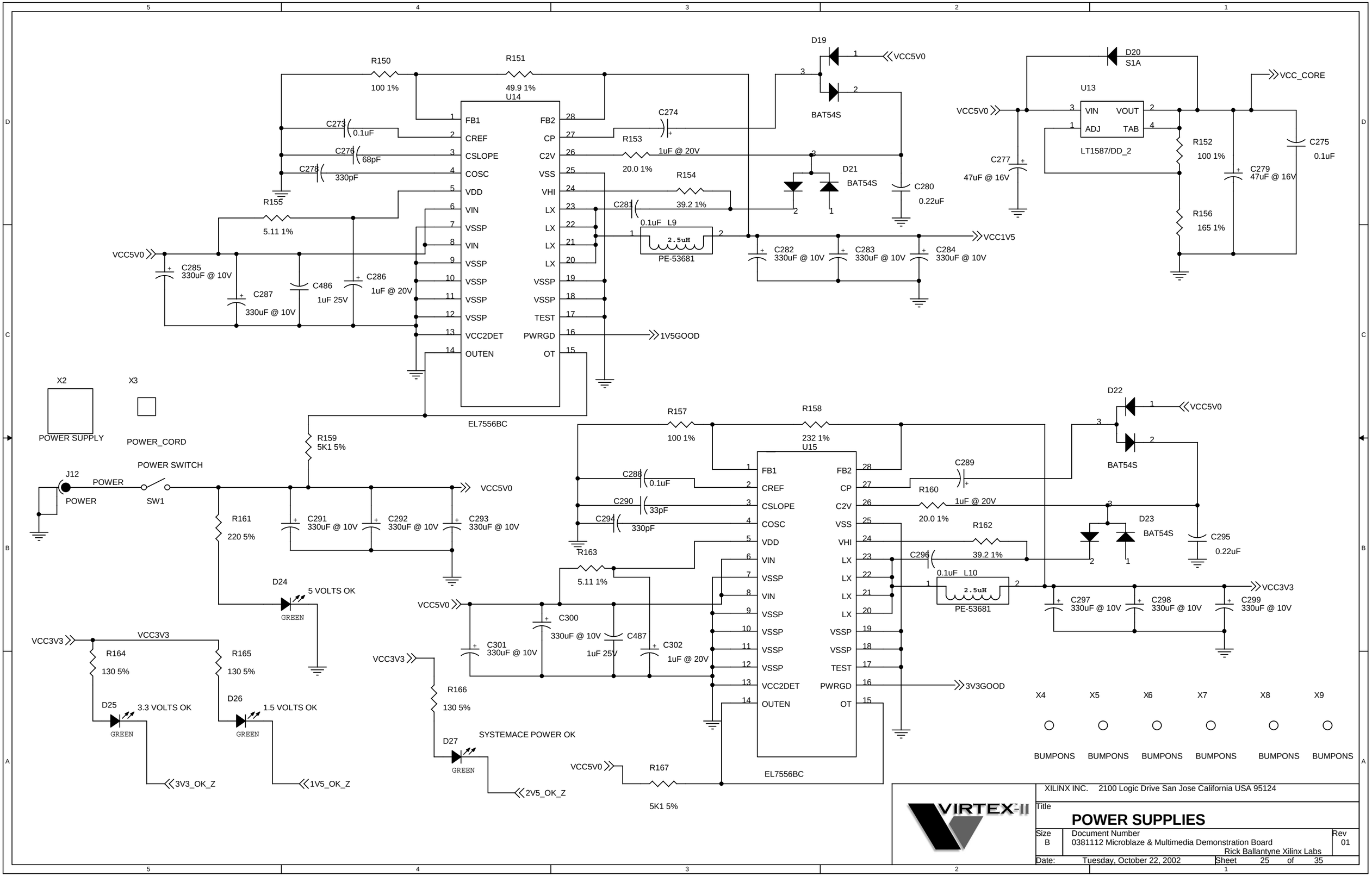
R150
100 1%
R151
49.9 1%
U14
EL7556BC
FB1
CREF
CSLOPE
COSC
VDD
VIN
VSSP
VIN
VSSP
VSSP
VSSP
VCC2DET
OUTEN
FB2
CP
C2V
VSS
VHI
LX
LX
LX
LX
VSSP
VSSP
TEST
PWRGD
OT
C273
0.1uF
C276
68pF
C278
330pF
R155
5.11 1%
VCC5V0
C285
330uF @ 10V
C287
330uF @ 10V
C486
1uF 25V
C286
1uF @ 20V
C274
1uF @ 20V
R153
20.0 1%
R154
39.2 1%
C281
0.1uF
L9
2.5uH
PE-53681
D19
BAT54S
D21
BAT54S
C280
0.22uF
C282
330uF @ 10V
C283
330uF @ 10V
C284
330uF @ 10V
VCC1V5
1V5GOOD
D20
S1A
U13
VIN
VOUT
ADJ
TAB
LT1587/DD_2
C277
47uF @ 16V
R152
100 1%
R156
165 1%
C279
47uF @ 16V
C275
0.1uF
VCC_CORE
X2
POWER SUPPLY
X3
POWER_CORD
POWER SWITCH
J12
POWER
POWER
SW1
R159
5K1 5%
R161
220 5%
C291
330uF @ 10V
C292
330uF @ 10V
C293
330uF @ 10V
D24
5 VOLTS OK
GREEN
VCC3V3
R164
130 5%
R165
130 5%
D25
3.3 VOLTS OK
GREEN
D26
1.5 VOLTS OK
GREEN
3V3_OK_Z
1V5_OK_Z
R157
100 1%
R158
232 1%
U15
EL7556BC
C288
0.1uF
C290
33pF
C294
330pF
R163
5.11 1%
C300
330uF @ 10V
C301
330uF @ 10V
C487
1uF 25V
C302
1uF @ 20V
R166
130 5%
D27
SYSTEMACE POWER OK
GREEN
2V5_OK_Z
R167
5K1 5%
C289
1uF @ 20V
R160
20.0 1%
R162
39.2 1%
C296
0.1uF
L10
2.5uH
PE-53681
3V3GOOD
D22
BAT54S
D23
BAT54S
C295
0.22uF
C297
330uF @ 10V
C298
330uF @ 10V
C299
330uF @ 10V
VCC3V3
X4
X5
X6
X7
X8
X9
BUMPONS
BUMPONS
BUMPONS
BUMPONS
BUMPONS
BUMPONS
VIRTEX-II
XILINX INC. 2100 Logic Drive San Jose California USA 95124
Title
POWER SUPPLIES
Size B
Document Number
0381112 Microblaze & Multimedia Demonstration Board
Rick Ballantyne Xilinx Labs
Rev 01
Date: Tuesday, October 22, 2002
Sheet 25 of 35

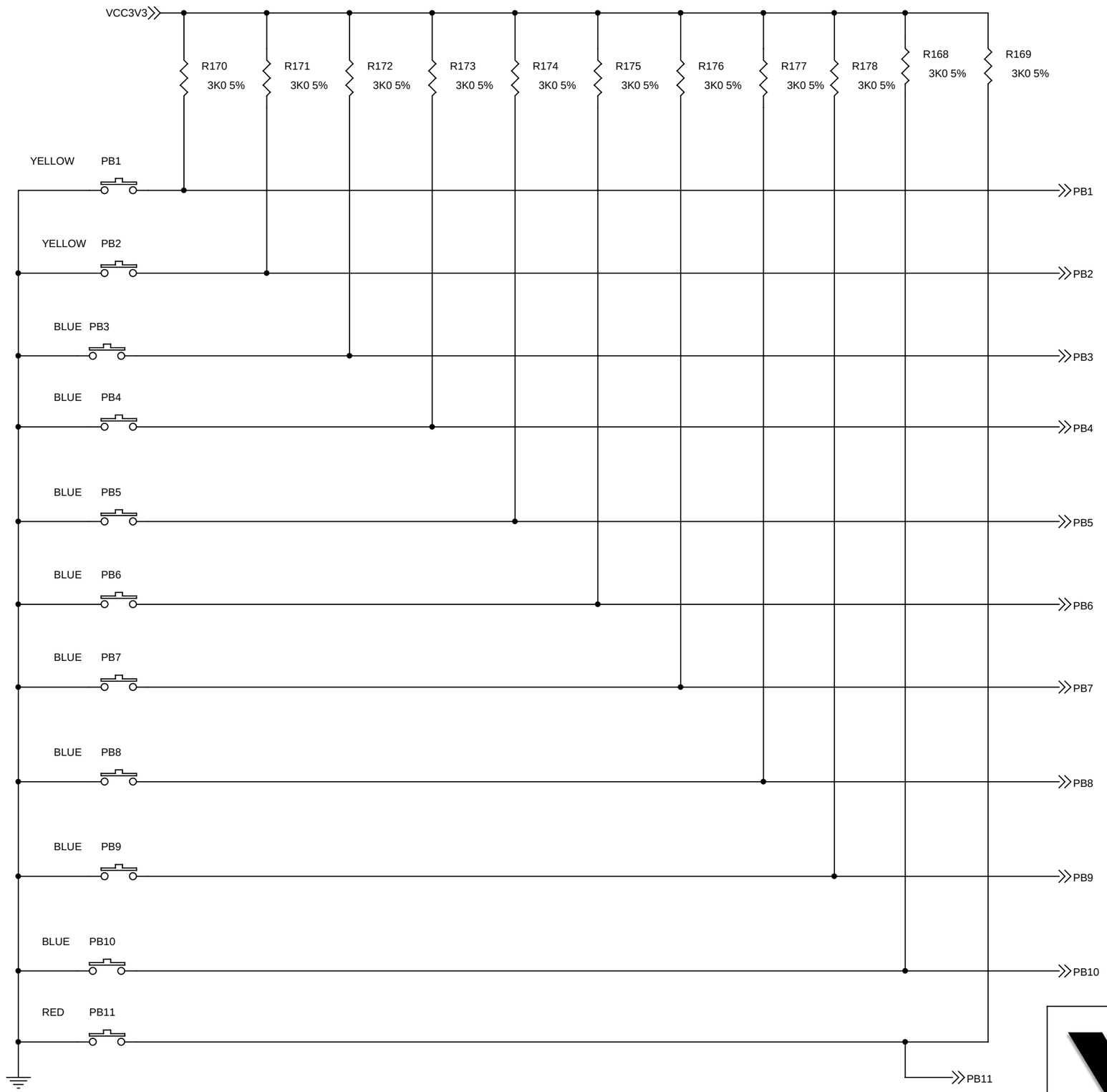

XILINX INC. 2100 Logic Drive San Jose California USA 95124

Title
PUSHBUTTONS

Size	Document Number	Rev
B	0381112 Microblaze & Multimedia Demonstration Board Rick Ballantyne Xilinx Labs	01

Date: Tuesday, October 22, 2002 Sheet 26 of 35

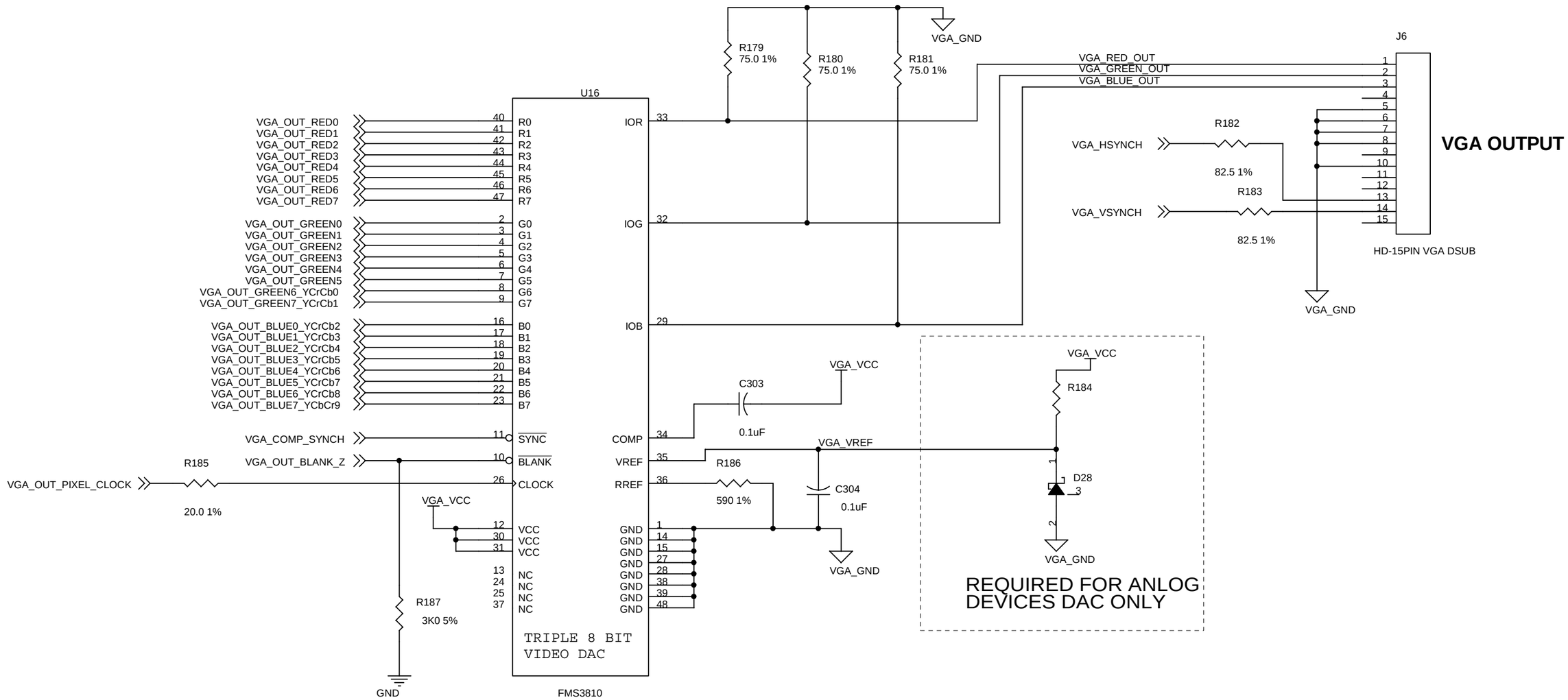

XILINX INC. 2100 Logic Drive San Jose California USA 95124

Title
SVGA OUTPUT

Size	Document Number	Rev
B	0381112 Microblaze & Multimedia Demonstration Board Rick Ballantyne Xilinx Labs	01

Date: Tuesday, October 22, 2002 Sheet 27 of 35

SYSTEMACE CAPS

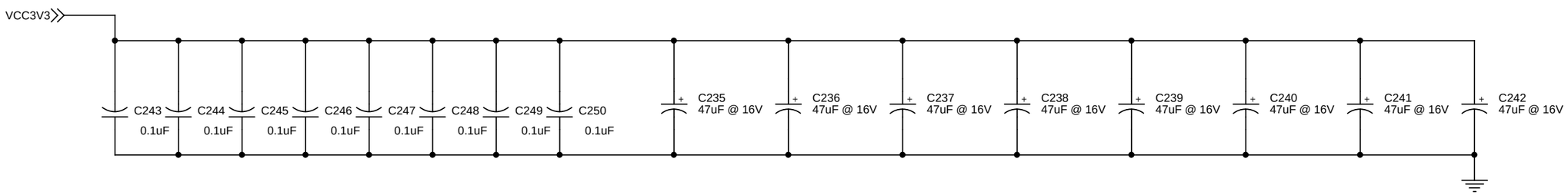

SYSTEMACE CAPS

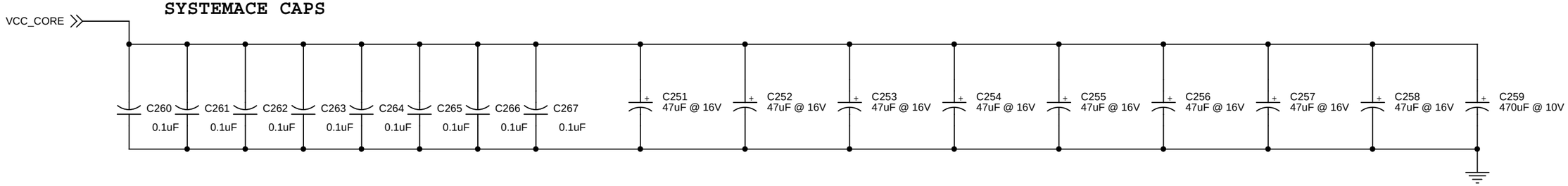

XILINX INC. 2100 Logic Drive San Jose California USA 95124

Title
SYSTEMACE CONTROLLER CAPS

Size	Document Number	Rev
B	0381112 Microblaze & Multimedia Demonstration Board Rick Ballantyne Xilinx Labs	01

Date: Tuesday, October 22, 2002 Sheet 28 of 35

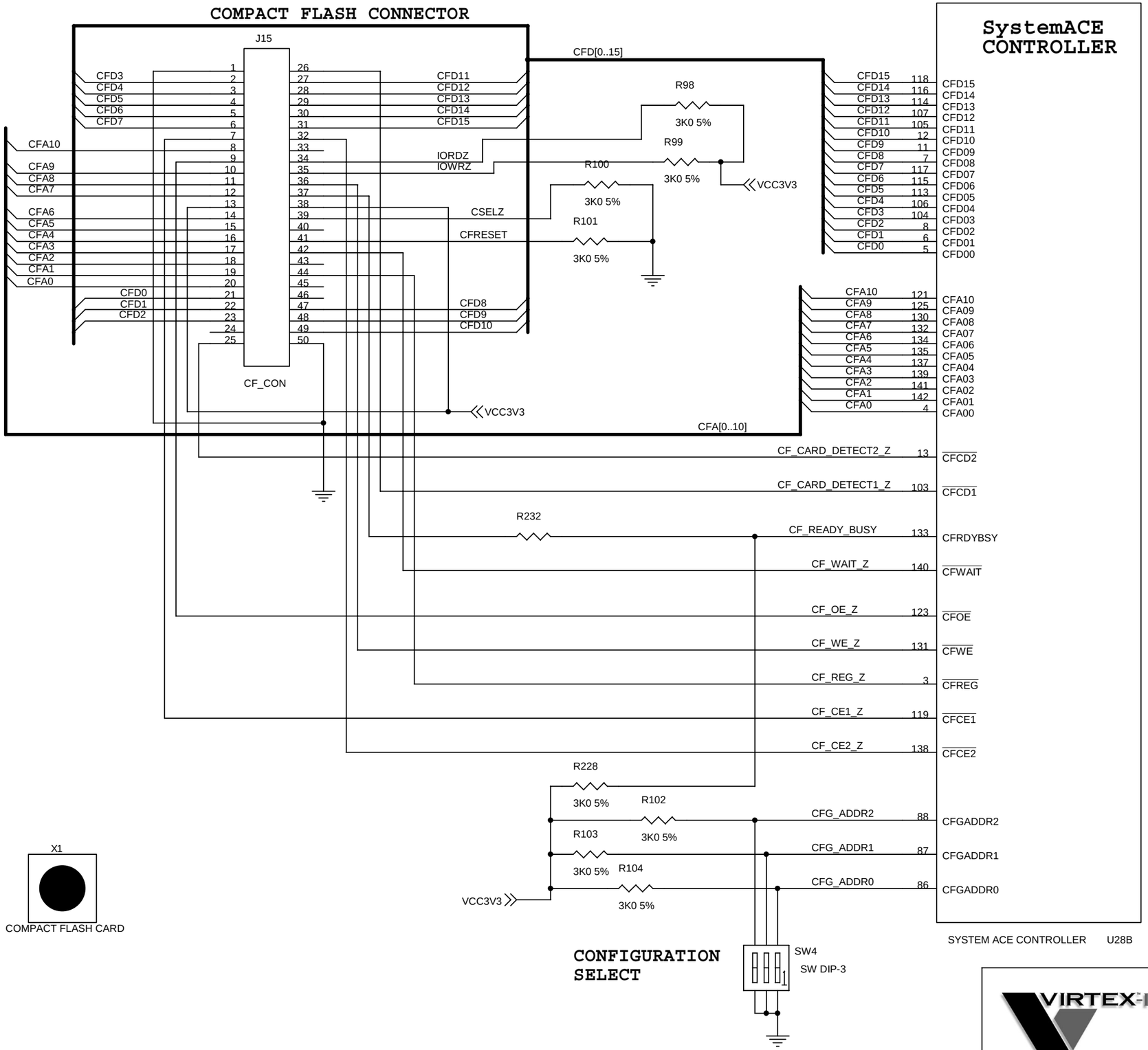

XILINX INC. 2100 Logic Drive San Jose California USA 95124

Title

SYSTEMACE COMPACT FLASH PORT

Size	Document Number	Rev
B	0381112 Microblaze & Multimedia Demonstration Board Rick Ballantyne Xilinx Labs	01

Date: Tuesday, October 22, 2002 Sheet 29 of 35

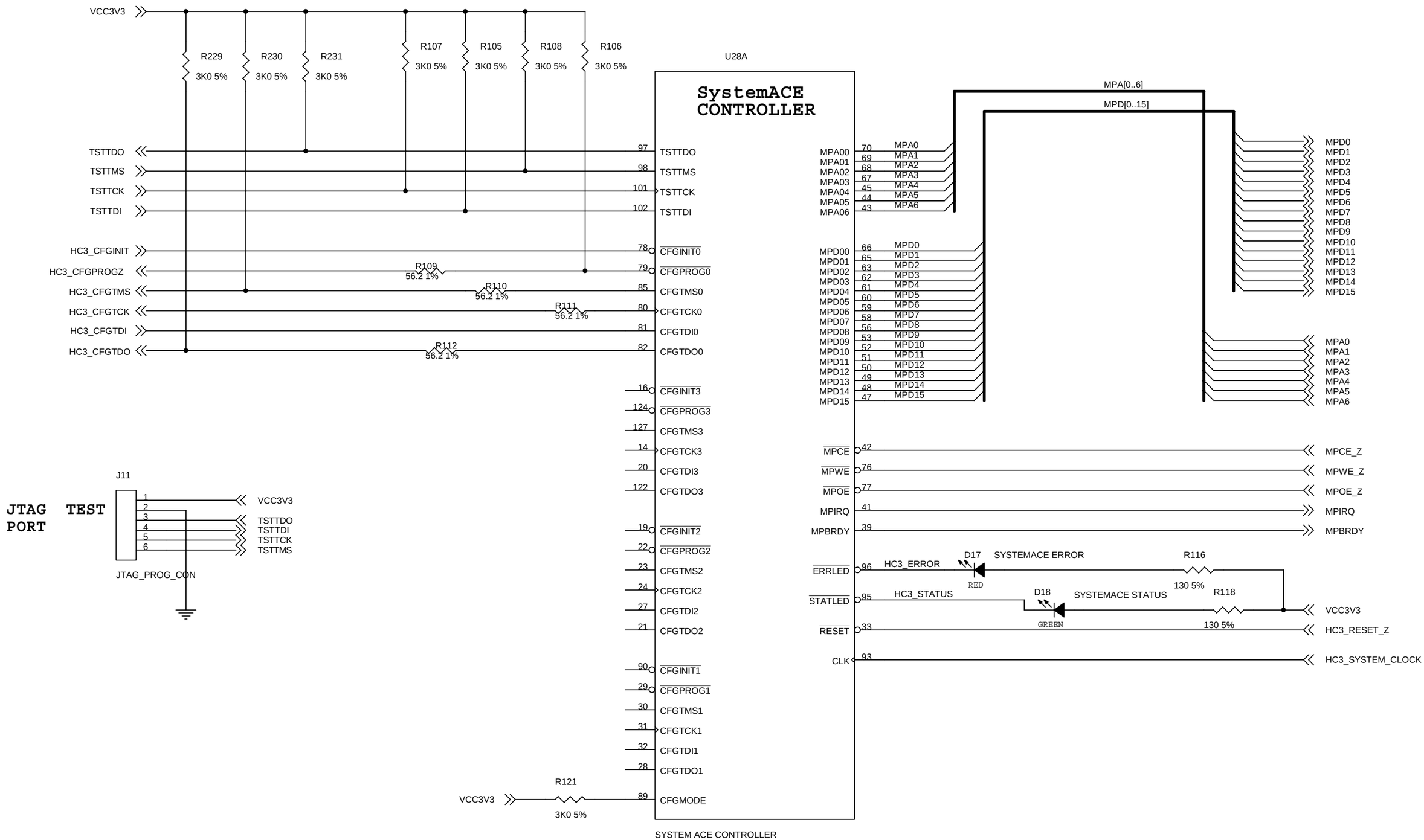

XILINX INC. 2100 Logic Drive San Jose California USA 95124

Title
SYSTEMACE MICRO PORT & JTAG TEST PORT

Size	Document Number	Rev
B	0381112 Microblaze & Multimedia Demonstration Board Rick Ballantyne Xilinx Labs	01

Date: Tuesday, October 22, 2002 Sheet 30 of 35

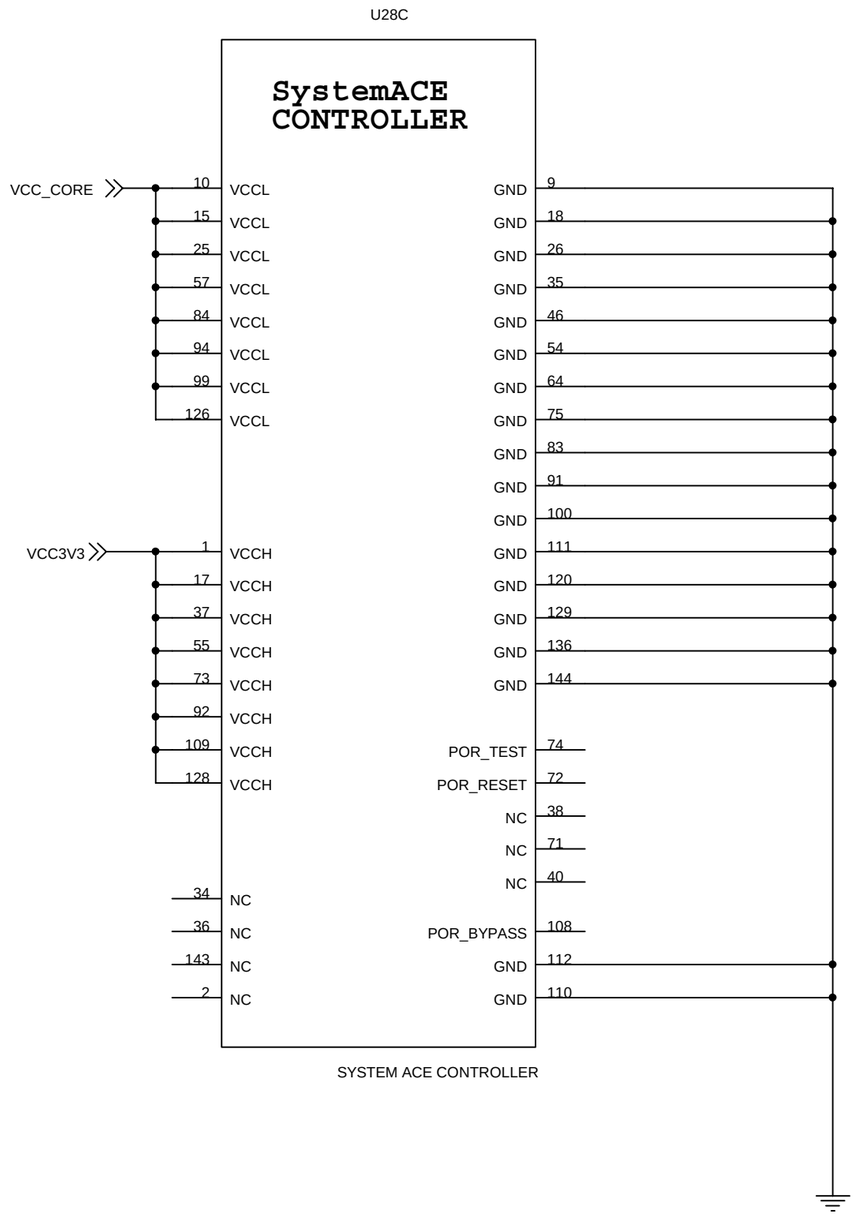

XILINX INC. 2100 Logic Drive San Jose California USA 95124

Title

SYSTEMACE CONTROLLER POWER

Size	Document Number	Rev
B	0381112 Microblaze & Multimedia Demonstration Board Rick Ballantyne Xilinx Labs	01

Date: Tuesday, October 22, 2002 Sheet 31 of 35

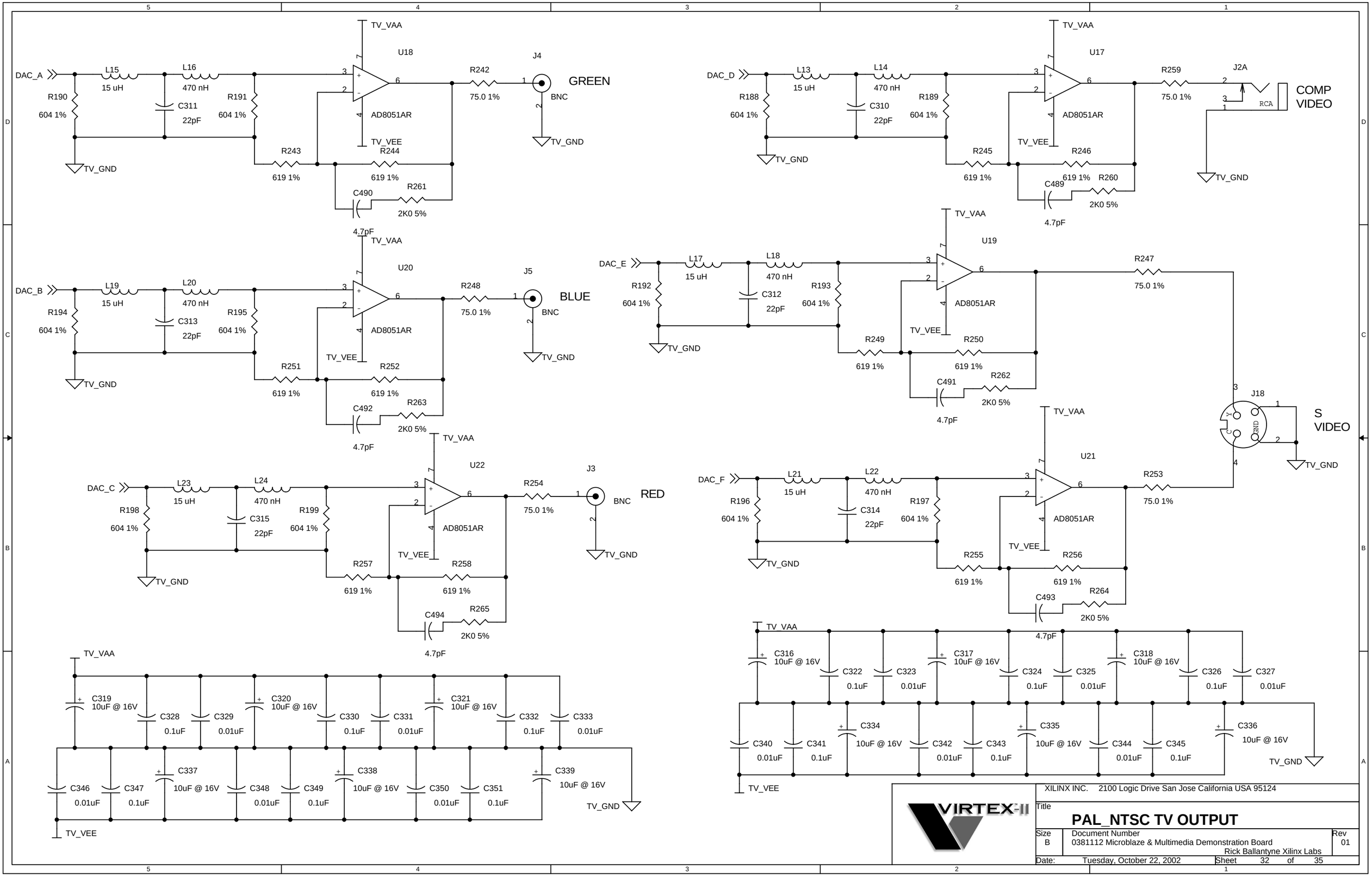
DAC_A
L15
15 uH
L16
470 nH
R190
604 1%
C311
22pF
R191
604 1%
TV_GND
TV_VAA
U18
AD8051AR
TV_VEE
R242
75.0 1%
J4
BNC
GREEN
R243
619 1%
R244
619 1%
C490
4.7pF
R261
2K0 5%
DAC_D
L13
15 uH
L14
470 nH
R188
604 1%
C310
22pF
R189
604 1%
U17
R259
75.0 1%
J2A
RCA
COMP
VIDEO
R245
619 1%
R246
619 1%
C489
4.7pF
R260
2K0 5%
DAC_B
L19
15 uH
L20
470 nH
R194
604 1%
C313
22pF
R195
604 1%
U20
R248
75.0 1%
J5
BLUE
R251
619 1%
R252
619 1%
C492
4.7pF
R263
2K0 5%
DAC_E
L17
15 uH
L18
470 nH
R192
604 1%
C312
22pF
R193
604 1%
U19
R247
75.0 1%
R249
619 1%
R250
619 1%
C491
4.7pF
R262
2K0 5%
J18
S
VIDEO
DAC_C
L23
15 uH
L24
470 nH
R198
604 1%
C315
22pF
R199
604 1%
U22
R254
75.0 1%
J3
BNC
RED
R257
619 1%
R258
619 1%
C494
4.7pF
R265
2K0 5%
DAC_F
L21
15 uH
L22
470 nH
R196
604 1%
C314
22pF
R197
604 1%
U21
R253
75.0 1%
R255
619 1%
R256
619 1%
C493
4.7pF
R264
2K0 5%
C319
10uF @ 16V
C328
0.1uF
C329
0.01uF
C320
10uF @ 16V
C330
0.1uF
C331
0.01uF
C321
10uF @ 16V
C332
0.1uF
C333
0.01uF
C346
0.01uF
C347
0.1uF
C337
10uF @ 16V
C348
0.01uF
C349
0.1uF
C338
10uF @ 16V
C350
0.01uF
C351
0.1uF
C339
10uF @ 16V
C316
10uF @ 16V
C322
0.1uF
C323
0.01uF
C317
10uF @ 16V
C324
0.1uF
C325
0.01uF
C318
10uF @ 16V
C326
0.1uF
C327
0.01uF
C340
0.01uF
C341
0.1uF
C334
10uF @ 16V
C342
0.01uF
C343
0.1uF
C335
10uF @ 16V
C344
0.01uF
C345
0.1uF
C336
10uF @ 16V
XILINX INC. 2100 Logic Drive San Jose California USA 95124
Title
PAL_NTSC TV OUTPUT
Size
B
Document Number
0381112 Microblaze & Multimedia Demonstration Board
Rick Ballantyne Xilinx Labs
Rev
01
Date: Tuesday, October 22, 2002
Sheet 32 of 35

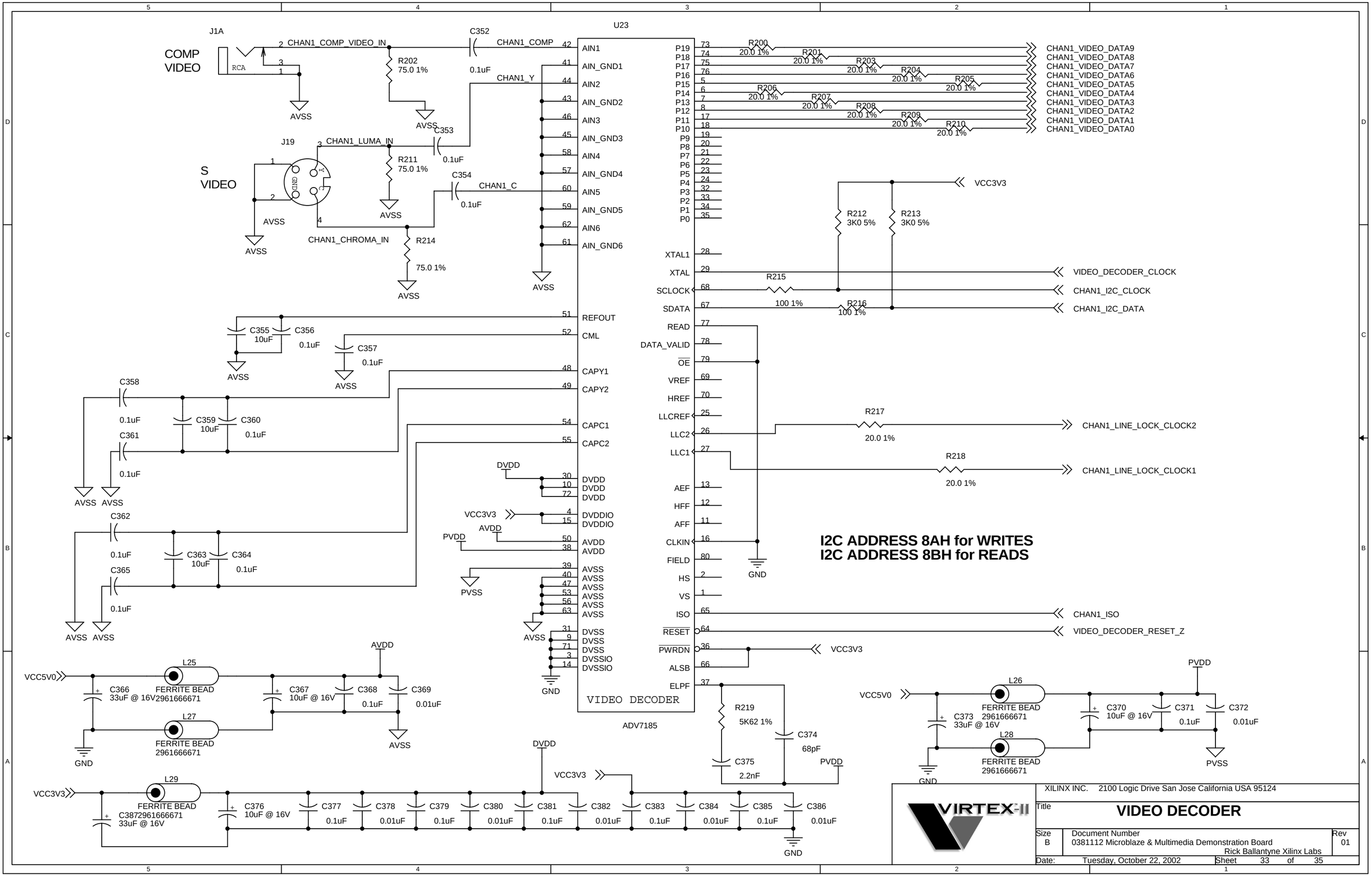
COMP VIDEO
J1A
RCA
CHAN1_COMP_VIDEO_IN
C352
CHAN1_COMP
R202 75.0 1%
0.1uF
CHAN1_Y
AVSS
C353
S VIDEO
J19
CHAN1_LUMA_IN
R211 75.0 1%
C354
CHAN1_C
CHAN1_CHROMA_IN
R214
75.0 1%
U23
AIN1
AIN_GND1
AIN2
AIN_GND2
AIN3
AIN_GND3
AIN4
AIN_GND4
AIN5
AIN_GND5
AIN6
AIN_GND6
REFOUT
CML
CAPY1
CAPY2
CAPC1
CAPC2
DVDD
DVDDIO
AVDD
AVSS
DVSS
DVSSIO
VIDEO DECODER
ADV7185
P19
P18
P17
P16
P15
P14
P13
P12
P11
P10
P9
P8
P7
P6
P5
P4
P3
P2
P1
P0
XTAL1
XTAL
SCLOCK
SDATA
READ
DATA_VALID
OE
VREF
HREF
LLCREF
LLC2
LLC1
AEF
HFF
AFF
CLKIN
FIELD
HS
VS
ISO
RESET
PWRDN
ALSB
ELPF
R200 20.0 1%
R201 20.0 1%
R203 20.0 1%
R204 20.0 1%
R205 20.0 1%
R206 20.0 1%
R207 20.0 1%
R208 20.0 1%
R209 20.0 1%
R210 20.0 1%
CHAN1_VIDEO_DATA9
CHAN1_VIDEO_DATA8
CHAN1_VIDEO_DATA7
CHAN1_VIDEO_DATA6
CHAN1_VIDEO_DATA5
CHAN1_VIDEO_DATA4
CHAN1_VIDEO_DATA3
CHAN1_VIDEO_DATA2
CHAN1_VIDEO_DATA1
CHAN1_VIDEO_DATA0
VCC3V3
R212 3K0 5%
R213 3K0 5%
R215 100 1%
R216 100 1%
VIDEO_DECODER_CLOCK
CHAN1_I2C_CLOCK
CHAN1_I2C_DATA
R217 20.0 1%
CHAN1_LINE_LOCK_CLOCK2
R218 20.0 1%
CHAN1_LINE_LOCK_CLOCK1
GND
I2C ADDRESS 8AH for WRITES
I2C ADDRESS 8BH for READS
CHAN1_ISO
VIDEO_DECODER_RESET_Z
R219 5K62 1%
C374 68pF
C375 2.2nF
PVDD
PVSS
VCC5V0
L25
L27
L26
L28
L29
FERRITE BEAD 2961666671
C366 33uF @ 16V
C367 10uF @ 16V
C368 0.1uF
C369 0.01uF
C370 10uF @ 16V
C371 0.1uF
C372 0.01uF
C373 33uF @ 16V
C376 10uF @ 16V
C377 0.1uF
C378 0.01uF
C379 0.1uF
C380 0.01uF
C381 0.1uF
C382 0.01uF
C383 0.1uF
C384 0.01uF
C385 0.1uF
C386 0.01uF
C355 10uF
C356 0.1uF
C357 0.1uF
C358 0.1uF
C359 10uF
C360 0.1uF
C361 0.1uF
C362 0.1uF
C363 10uF
C364 0.1uF
C365 0.1uF
VIRTEX-II
XILINX INC. 2100 Logic Drive San Jose California USA 95124
Title
VIDEO DECODER
Size B
Document Number
0381112 Microblaze & Multimedia Demonstration Board
Rick Ballantyne Xilinx Labs
Rev 01
Date: Tuesday, October 22, 2002
Sheet 33 of 35

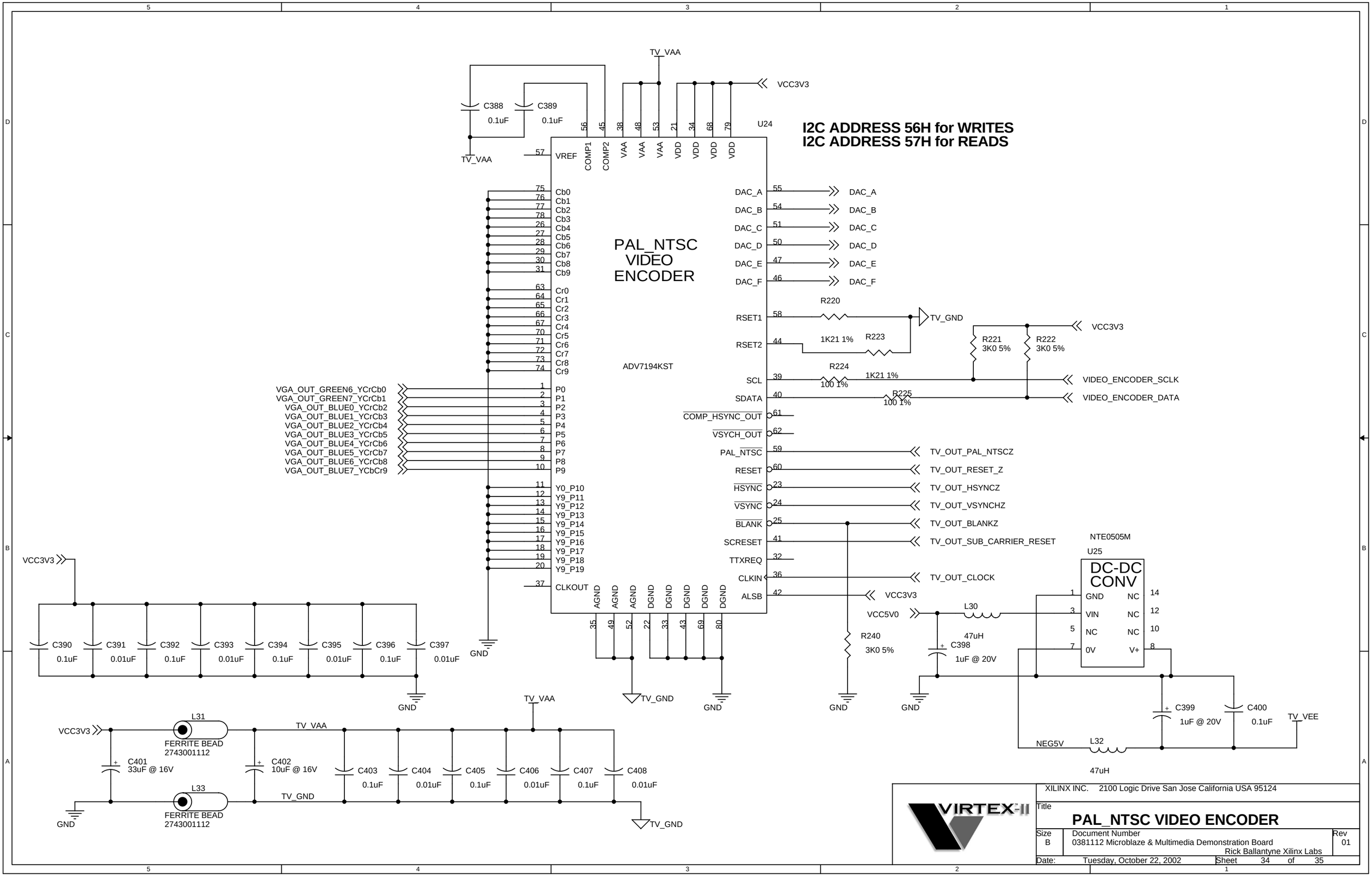
I2C ADDRESS 56H for WRITES
I2C ADDRESS 57H for READS
PAL_NTSC VIDEO ENCODER
ADV7194KST
U24
TV_VAA
VCC3V3
C388 0.1uF
C389 0.1uF
VREF
COMP1
COMP2
VAA
VDD
Cb0 Cb1 Cb2 Cb3 Cb4 Cb5 Cb6 Cb7 Cb8 Cb9
Cr0 Cr1 Cr2 Cr3 Cr4 Cr5 Cr6 Cr7 Cr8 Cr9
P0 P1 P2 P3 P4 P5 P6 P7 P8 P9
VGA_OUT_GREEN6_YCrCb0
VGA_OUT_GREEN7_YCrCb1
VGA_OUT_BLUE0_YCrCb2
VGA_OUT_BLUE1_YCrCb3
VGA_OUT_BLUE2_YCrCb4
VGA_OUT_BLUE3_YCrCb5
VGA_OUT_BLUE4_YCrCb6
VGA_OUT_BLUE5_YCrCb7
VGA_OUT_BLUE6_YCrCb8
VGA_OUT_BLUE7_YCbCr9
Y0_P10 Y9_P11 Y9_P12 Y9_P13 Y9_P14 Y9_P15 Y9_P16 Y9_P17 Y9_P18 Y9_P19
CLKOUT
AGND DGND
DAC_A DAC_B DAC_C DAC_D DAC_E DAC_F
RSET1 RSET2 SCL SDATA
COMP_HSYNC_OUT
VSYCH_OUT
PAL_NTSC RESET HSYNC VSYNC BLANK SCRESET TTXREQ CLKIN ALSB
R220
R223 1K21 1%
R224 1K21 1%
R225 100 1%
R221 3K0 5%
R222 3K0 5%
TV_GND
VIDEO_ENCODER_SCLK
VIDEO_ENCODER_DATA
TV_OUT_PAL_NTSCZ
TV_OUT_RESET_Z
TV_OUT_HSYNCZ
TV_OUT_VSYNCHZ
TV_OUT_BLANKZ
TV_OUT_SUB_CARRIER_RESET
TV_OUT_CLOCK
R240 3K0 5%
NTE0505M
U25
DC-DC CONV
GND VIN NC 0V
NC NC NC V+
VCC5V0
L30 47uH
C398 1uF @ 20V
C399 1uF @ 20V
C400 0.1uF
TV_VEE
NEG5V
L32 47uH
C390 0.1uF
C391 0.01uF
C392 0.1uF
C393 0.01uF
C394 0.1uF
C395 0.01uF
C396 0.1uF
C397 0.01uF
GND
L31 FERRITE BEAD 2743001112
L33 FERRITE BEAD 2743001112
C401 33uF @ 16V
C402 10uF @ 16V
C403 0.1uF
C404 0.01uF
C405 0.1uF
C406 0.01uF
C407 0.1uF
C408 0.01uF
XILINX INC. 2100 Logic Drive San Jose California USA 95124
Title
PAL_NTSC VIDEO ENCODER
Size B
Document Number
0381112 Microblaze & Multimedia Demonstration Board
Rick Ballantyne Xilinx Labs
Rev 01
Date: Tuesday, October 22, 2002
Sheet 34 of 35

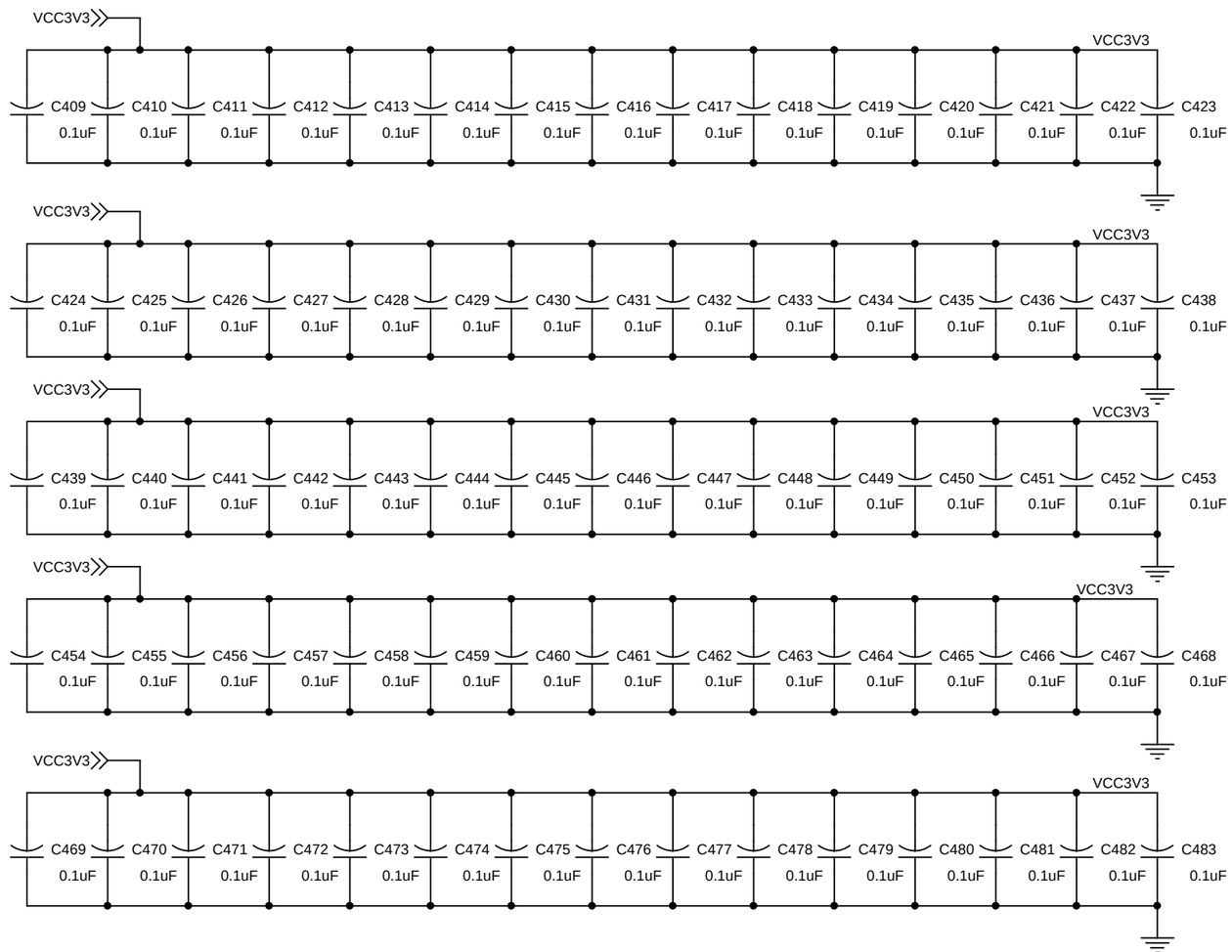

XILINX INC. 2100 Logic Drive San Jose California USA 95124

Title

ZBT MEMORY CAPS

Size	Document Number	Rev
B	0381112 Microblaze & Multimedia Demonstration Board Rick Ballantyne Xilinx Labs	01

Date: Tuesday, October 22, 2002 Sheet 35 of 35