Nyquist-Rate D/A Converters

D/A Converter Basics.

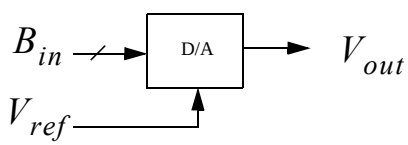

- B_{in} is a digital signal (or word),

$$B_{in} = b_1 2^{-1} + b_2 2^{-2} + \ldots + b_N 2^{-N} \quad (1)$$

- b_i equals a “1” or a “0” (i.e. a binary digit).
- V_{ref} — an analog reference; V_{out} — output .

$$V_{out} = V_{ref}(b_1 2^{-1} + b_2 2^{-2} + \ldots + b_N 2^{-N}) \quad (2)$$

- ***Define*** V_{LSB} to be LSB signal change, $V_{LSB} \equiv V_{ref}/2^N$

D/A Converter Basics

- For errors, define "units" of LSB 1 LSB = $1/2^N$
- A ***multiplying*** D/A allows V_{ref} to be a ***varying input*** — V_{out} proportional to multiplication of V_{ref} and B_{in}.
- For ***ideal*** D/A , output signal is a ***well defined value*** — no quantization error!

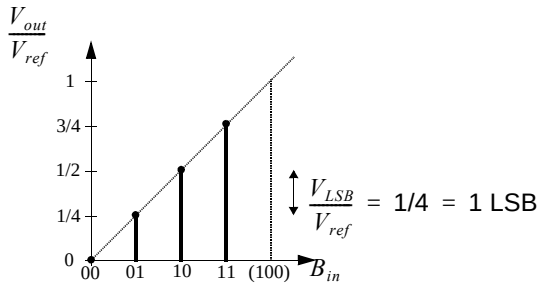

D/A Resistor-String

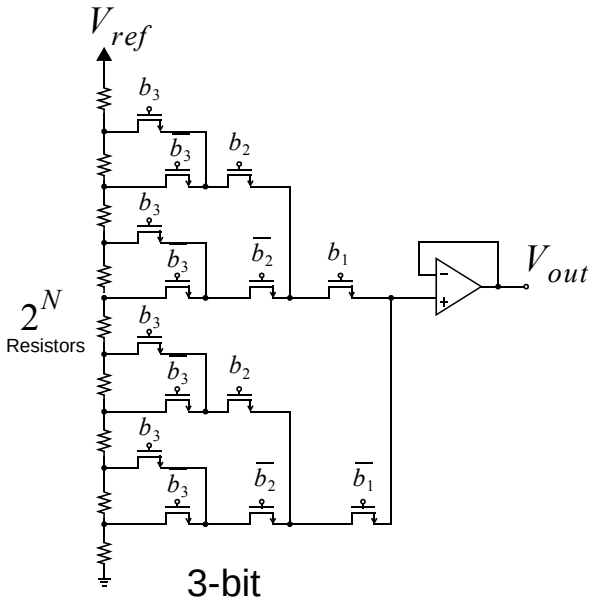

- Guaranteed monotonic
- Integrated with better than 10-bits absolute accuracy.
- Delay through the switch network major speed limitation
- Resistors might be realized using polysilicon
- If n-channel only used, can be laid out small
- Requires 2^N resistors

D/A Resistor-String — Digital Decoding

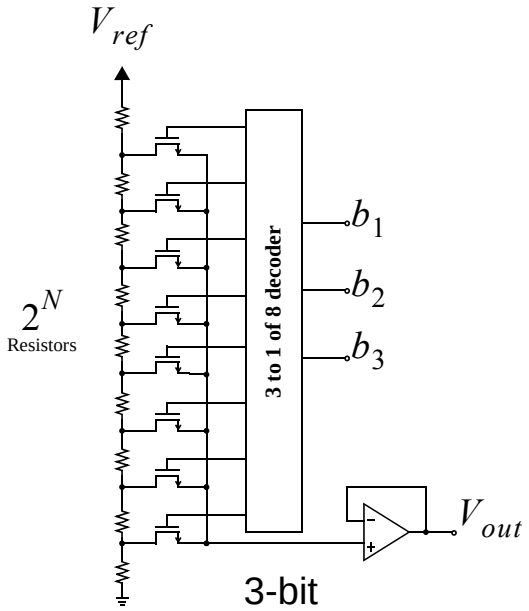

- Higher speed implementation (less resistance thru transistors)
- Large cap load on buffer input
- Can pipeline digital decoding for faster speed
- Requires 2^N resistors

Folded-resistor-string D/A

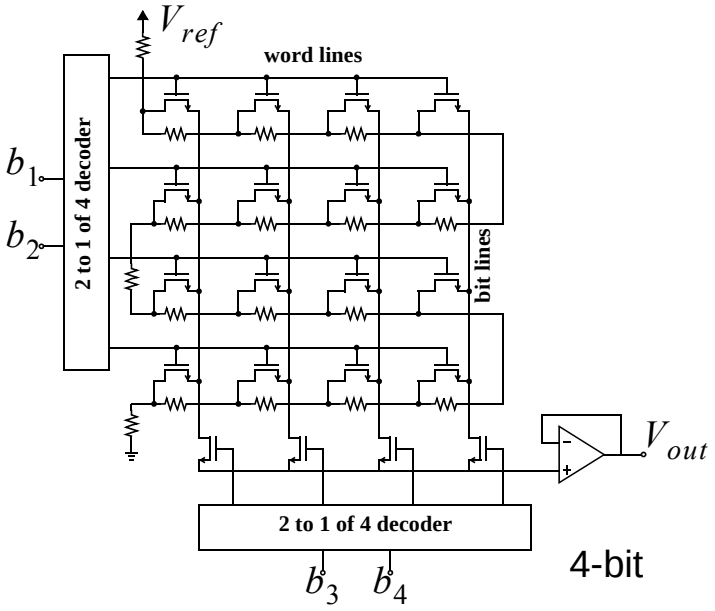

- Less capacitance load over the single bus approach
- Requires 2^N resistors

Binary-Weighted Resistor D/A's.

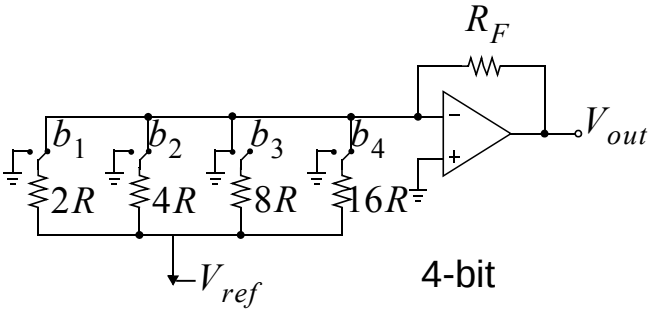

4-bit

$$V_{\text{out}} = -R_F V_{ref}\left(-\frac{b_1}{2R} - \frac{b_2}{4R} - \frac{b_3}{8R} - \ldots\right) \quad (3)$$

- Only N resistors
- Resistor and current ratios are on the order of 2^N
- No guarantee of monotonicity.
- Prone to glitches (more later).

Reduced Spread Binary Resistor D/A

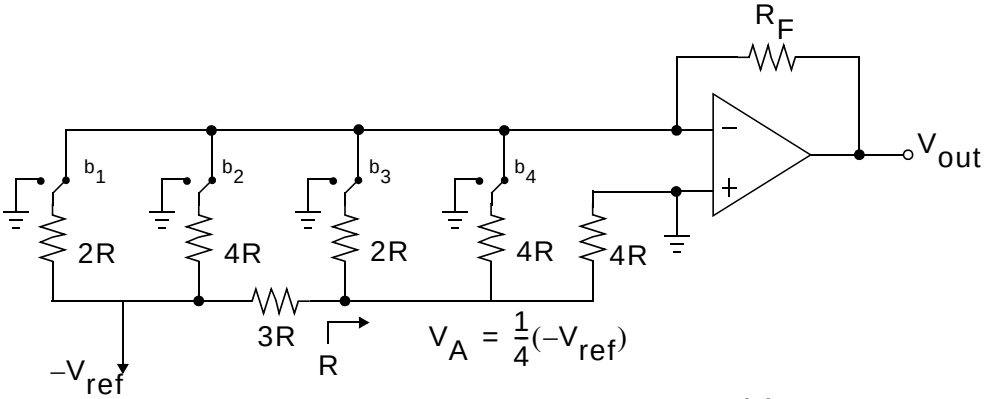

4-bit

- Reduced resistor spread
- Keep repeating this procedure —> R-2R ladder

R-2R Based D/A Converters

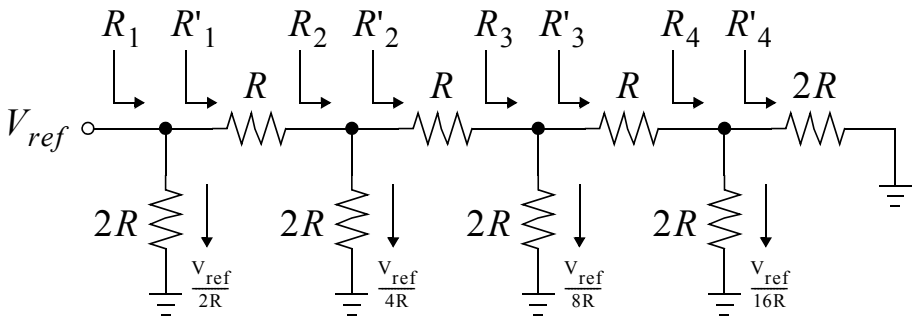

$$
\begin{aligned}
R'_4 &= 2R \\
R_4 &= 2R \parallel 2R = R \\
R'_3 &= R + R_4 = 2R \\
R_3 &= 2R \parallel R'_3 = R
\end{aligned}
\tag{4}
$$

- Small size, good matching (only R and 2R)

R-2R Based Resistor Ladders

- Example D/A converter

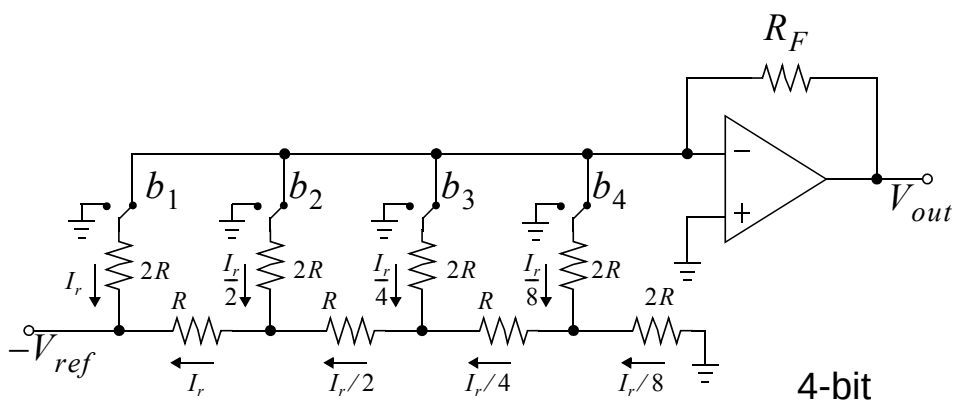

- Currents through the switches are scaled
- Should scale switch sizes for good accuracy
- No node voltage changes except for output —> fast

R-2R Based Resistor Ladders

- Slower circuit having ***equal*** current through switches

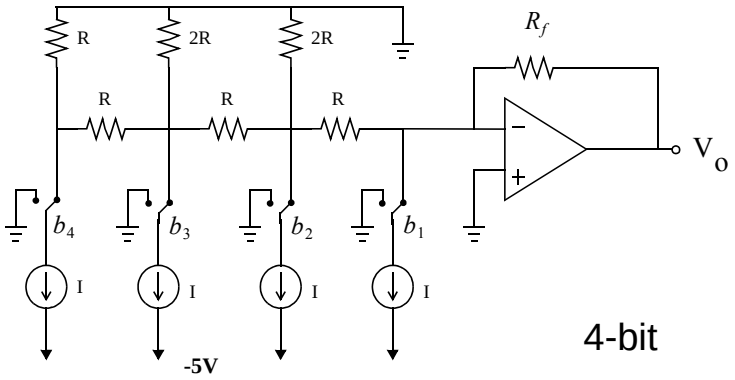

- Node voltages change — slower circuit
- No need to scale switch sizes (smaller size)

Glitches

- Different delays for switching the different currents
- MSB change often worst case

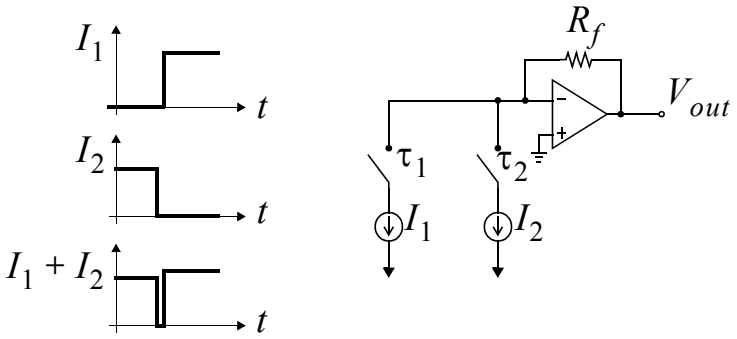

- Glitches can be minimized by limiting the bandwidth but that slows down circuit
- Use thermometer code to reduce glitches

Charge-Redistribution SC D/A's

- Programmable SC gain amplifier.

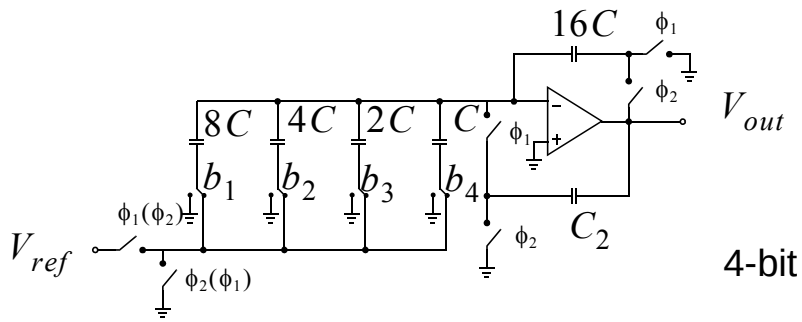

- Sign bit realized by interchanging input phases
- Carefully clock-waveforms required to minimize voltage dependency of clock-feed-through.
- Digital codes should be changed when input side of capacitors are connected to ground. Requires extra digital complexity.

Thermometer D/A Converters

Decimal	Binary			Thermometer Code						
	b_1	b_2	b_3	d_1	d_2	d_3	d_4	d_5	d_6	d_7
0	0	0	0	0	0	0	0	0	0	0
1	0	0	1	0	0	0	0	0	0	1
2	0	1	0	0	0	0	0	0	1	1
3	0	1	1	0	0	0	0	1	1	1
4	1	0	0	0	0	0	1	1	1	1
5	1	0	1	0	0	1	1	1	1	1
6	1	1	0	0	1	1	1	1	1	1
7	1	1	1	1	1	1	1	1	1	1

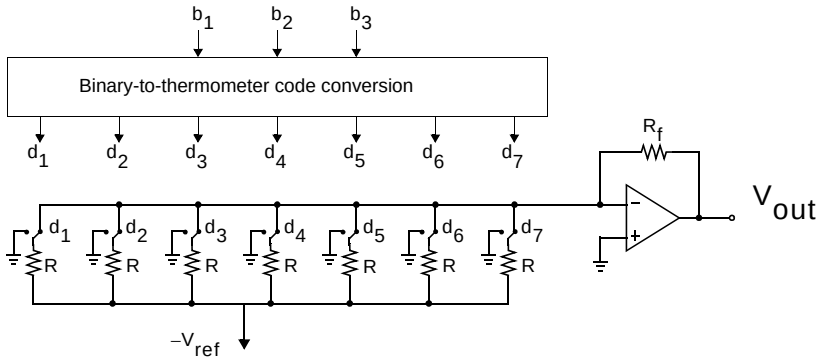

Thermometer Code D/A Converter

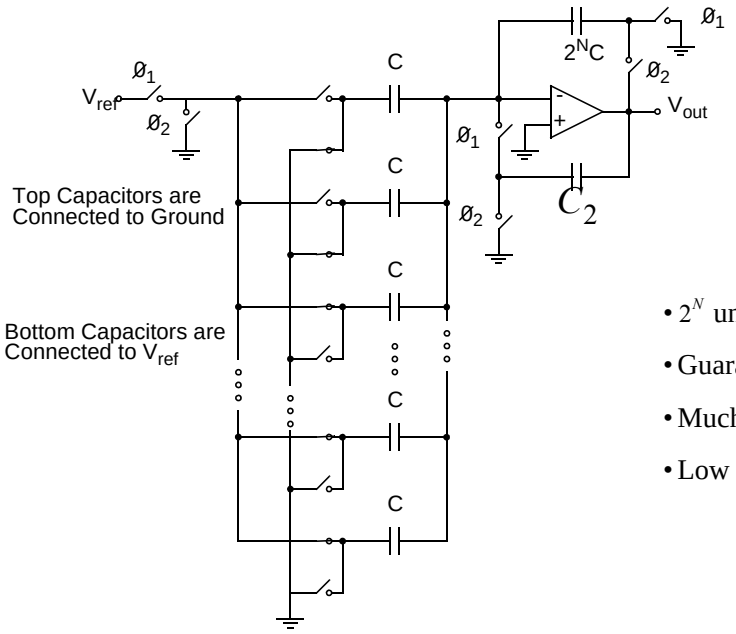

- 2^N unit sized caps
- Guaranteed monotonic
- Much lower glitching
- Low DNL

Current-Mode D/A's

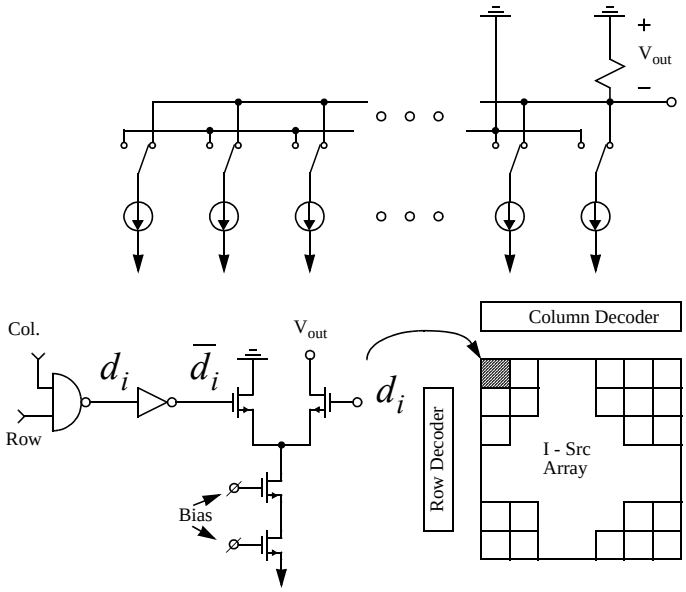

- Thermometer-code
- High-speed, output feeds directly to resistor
- Important that delay to all the switches are equal.
- Overlapped clocks much better than having non-overlapped clocks.

Segmented D/A

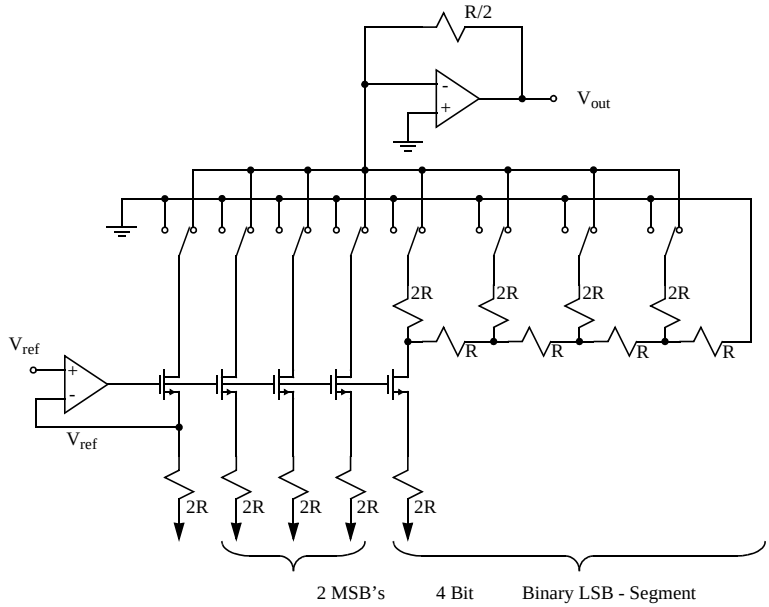

- Combine thermometer and binary
- Accuracy needed for LSB reduced
- Glitches reduced
- Very popular